ELECTRIC POWER RESEARCH INSTITUTE

Running High Performance Computers on High Voltage Direct Current (380VDC)

Dennis P. Symanski
EPRI - Senior Project Manager

High Performance Computing Energy Efficiency Working Group

13MAR2012

From Dept of Energy Secretary Steven Chu

- As Energy Secretary Steven Chu has noted, “America cannot build a 21st Century energy economy with a mid-20th Century electricity system.”
- Transforming the current grid into a dynamic, resilient, and adaptable Smart Grid will be one of the biggest technological challenges of our times. The rewards, however, may be dramatic, enabling consumers to better control their electricity use, integrating the next generation of plug-in electric vehicles, increasing efficiency, and better harnessing renewable energy.

Source: Department of Energy, Communications Requirement Of Smart Grid Technologies, October 5, 2010

© 2012 Electric Power Research Institute, Inc. All rights reserved.

Data Center Types, Sizes and Numbers

Type	Server Closet	Server Room	Localized Data Center	Mid-tier Data Center	Enterprise-Class Data Center
Scope	Secondary computer location, often outside of IT control, or may be a primary site for a small business	Secondary computer location, under IT control, or may be a primary site for a small business	Primary or secondary computer location, under IT control	Primary computing location, under IT control	Primary computing location, under IT control
Power/cooling	Standard room air-conditioning, no UPS	Upgraded room air conditioning, single UPS	Maintained at 17 C; some power and cooling redundancy	Maintained at 17 C; some power and cooling redundancy	Maintained at 17 C; at least N+1 power & cooling redundancy
Sq ft	<200sq ft	<500sq ft	<1,000sq ft	<5,000sq ft	>5,000 sq ft
US data centers (2009 est)	1,345,741 = 51.8%	1,170,399 = 45.1%	64,229 = 2.5%	9,758 = 0.4%	7,006 = 0.3%
Total Servers (2009 est)	2,135,538 = 17%	3,057,834 = 24%	2,107,592 = 16%	1,869,595 = 15%	3,604,678 = 28%
Average servers per location	2	3	32	192	515

© 2012 Electric Power Research Institute, Inc. All rights reserved.

Data Center Type and Server Population

Number of Servers by Data Center Type

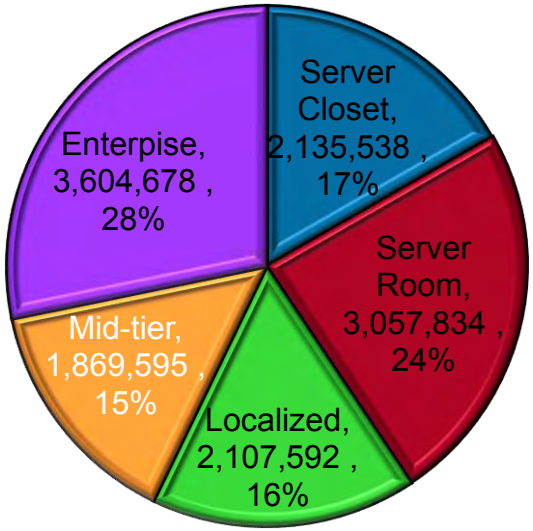

0.7% of data centers (Enterprise & Mid-tier) contain 43% of all servers

(Amazon/Apple/Facebook/Google/Yahoo)

They have staffs of internal electrical & mechanical engineers to design & construct efficient data centers

---

99.3% of data centers (more than 2.5 million of them) contain 57% of all servers

(Hospitals/Hotels/Universities/Utilities/Banks /City Halls/Supermarkets/Chain Stores)

These data centers operators struggle with heat/space/power problems without much internal expertise

© 2012 Electric Power Research Institute, Inc. All rights reserved.

EPRI ELECTRIC POWER RESEARCH INSTITUTE

Data Center Energy Use –Why It's Important! They used 1.5% of US Electrical Energy in 2006 & Growing To ~3% In 2011

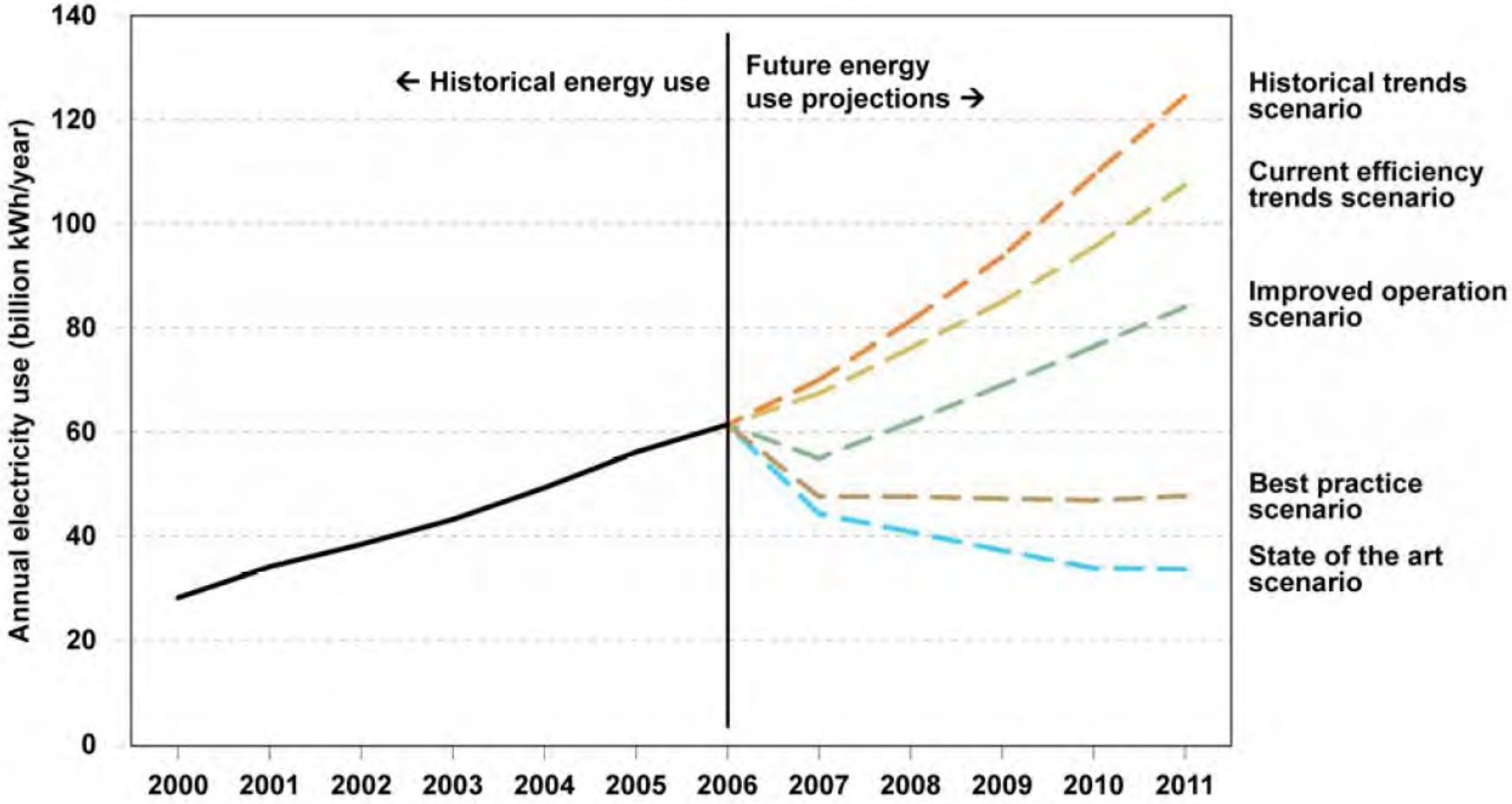

From: EPA Report to Congress on Server and Data Center Efficiency, 2007. It is estimated that this sector consumed about 61 billion kilowatt-hours (kWh) in 2006 (1.5 percent of total U.S. electricity consumption) for a total electricity cost of about $4.5 billion

© 2012 Electric Power Research Institute, Inc. All rights reserved.

EPRI ELECTRIC POWER RESEARCH INSTITUTE

380VDC Data Centers?!? REALLY???

~28% facility energy savings, incl. cooling compared to "typical" AC system

~7% facility energy savings, incl. cooling compared to "best-in-class" AC system

~33% space savings

200% to 1000% reliability improvement

15% electrical facility capital cost savings

Overall heat load reduction reduces overall cooling requirement

Using fewer of the earth's resources (15% component reduction)

© 2012 Electric Power Research Institute, Inc. All rights reserved.

380VDC Data Center Activity

- Involved With Multiple 380VDC Demos
  - Universities
  - Electric Utilities
  - Telecom Industry
- Harmonizing Multiple 380VDC Standards Efforts
  - DC Power Partners Joining EMerge Alliance
  - European Telecommunications Standards Institute
  - International Electrotechnical Commission (SG4)
  - NFPA 70:National Electrical Code (2011>>>2014)
- Working With Many Manufacturers
  - IT Equipment As Well As Facility Equipment

© 2012 Electric Power Research Institute, Inc. All rights reserved.

Who Is EMerge?

- Manufacturers
- Building Owners
- Technology Leaders
- Contractors/Builders
- Architects
- Engineers
- National Labs
- Codes & Standards Groups

Founding Governing Members

Participating Members

General Members

Corresponding Members

Liaison Members

Supporting Members

For a full list of Members, please visit www.EMergeAlliance.org

© 2012 Electric Power Research Institute, Inc. All rights reserved.

EPRI ELECTRIC POWER RESEARCH INSTITUTE

Worldwide 380VDC Field Trials

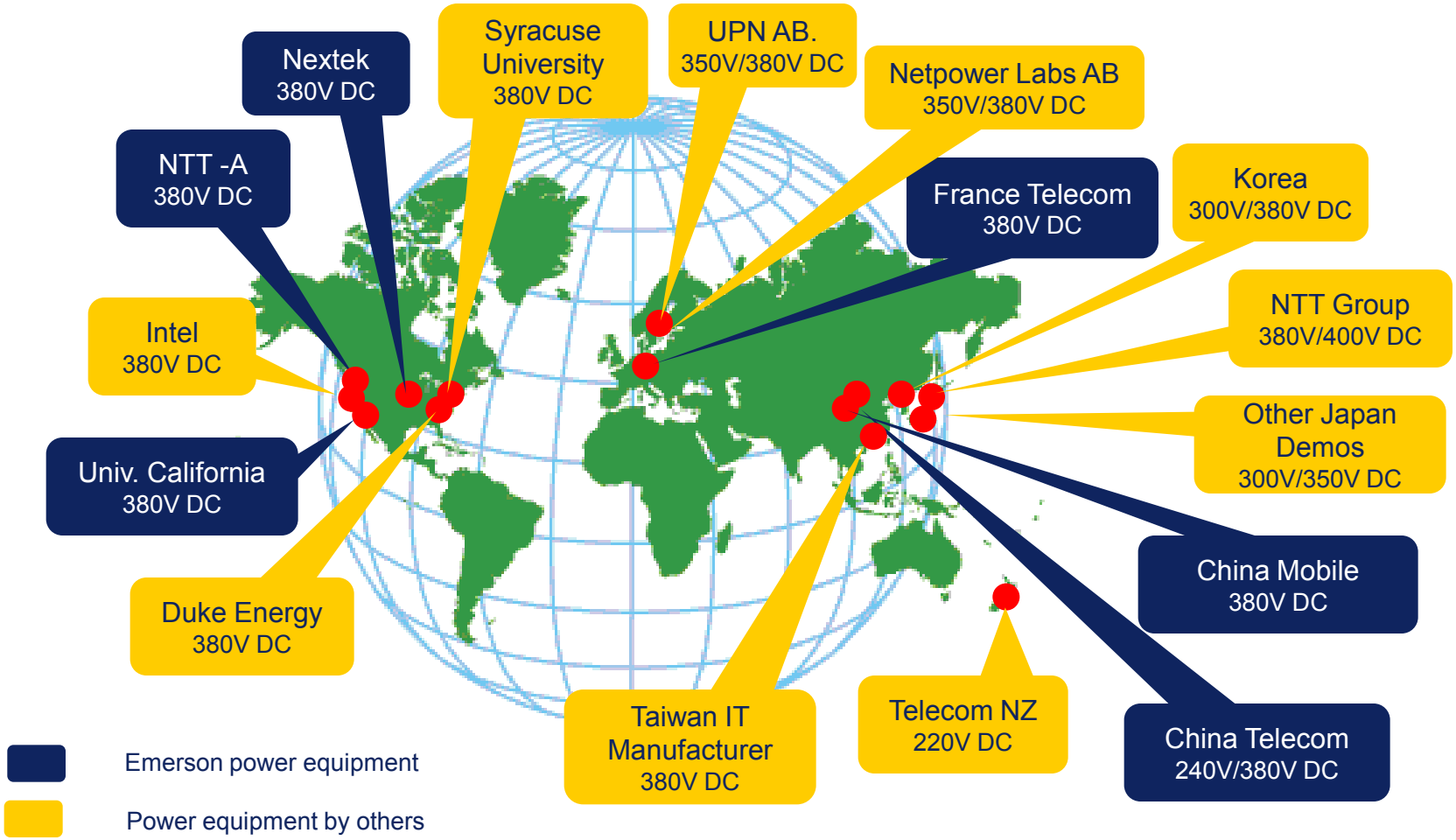

Vendor participants include:
HP, IBM, EMC, Fujitsu, Hitachi, NEC

© 2012 Electric Power Research Institute, Inc. All rights reserved.

EPRI ELECTRIC POWER RESEARCH INSTITUTE

380VDC Data Center Demos

EPRI/LBNL - Electric Power Research Institute
Lawrence Berkeley National Lab, California

Duke Energy data center in Charlotte, North Carolina

Calit2 - California Institute for Telecommunications and Information Technology , UC San Diego

© 2012 Electric Power Research Institute, Inc. All rights reserved.

Standard 208VAC vs 380VDC Data Center

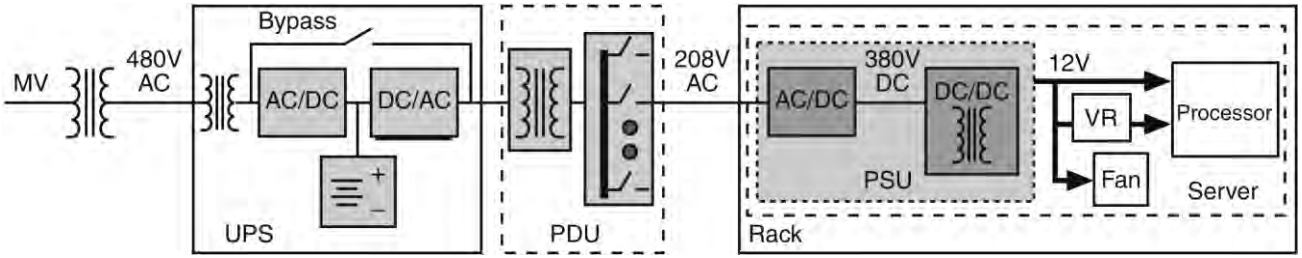

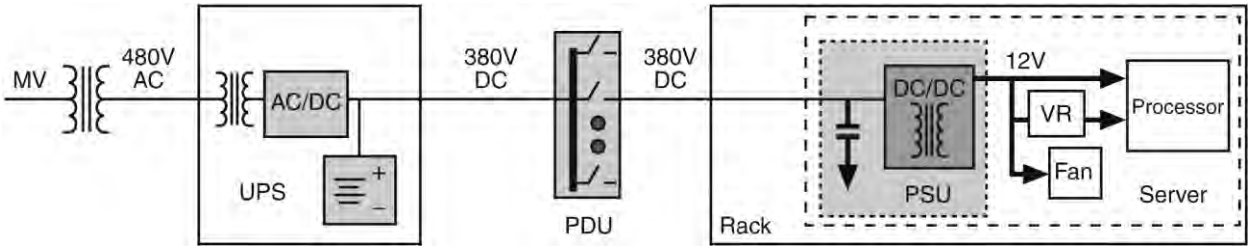

© 2012 Electric Power Research Institute, Inc. All rights reserved.

ELECTRIC POWER RESEARCH INSTITUTE

Duke Energy 380VDC Data Center Demo

HP Servers

IBM Servers

EMC Storage Arrays

Delta Rectifiers

StarLine Busway

Dranetz-BMI Metering

© 2012 Electric Power Research Institute, Inc. All rights reserved.

ELECTRIC POWER RESEARCH INSTITUTE

Duke Energy Data Center AC vs DC Set-Up

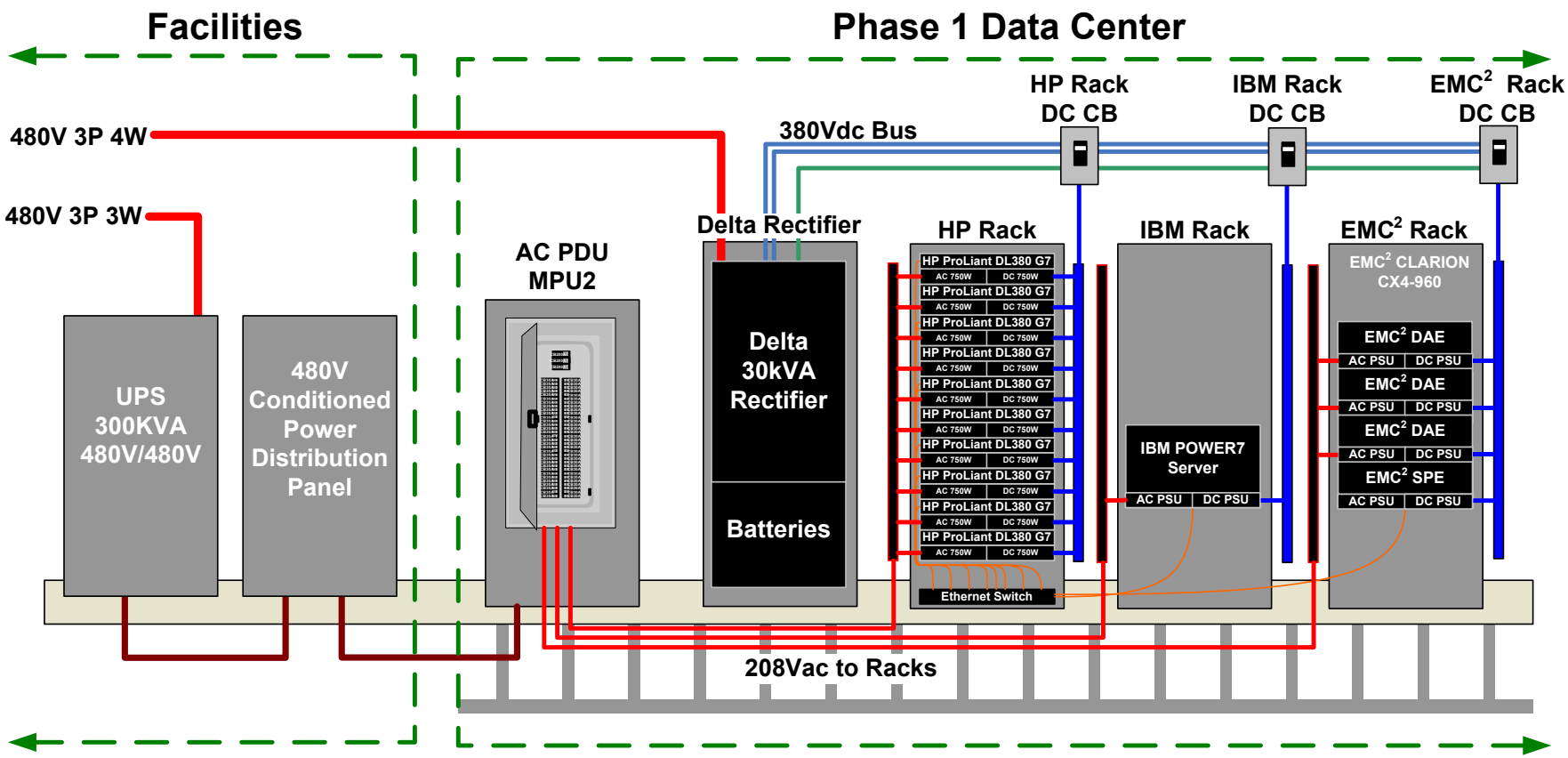

© 2012 Electric Power Research Institute, Inc. All rights reserved.

EPRI ELECTRIC POWER RESEARCH INSTITUTE

Duke Energy Data Center Metering Scheme

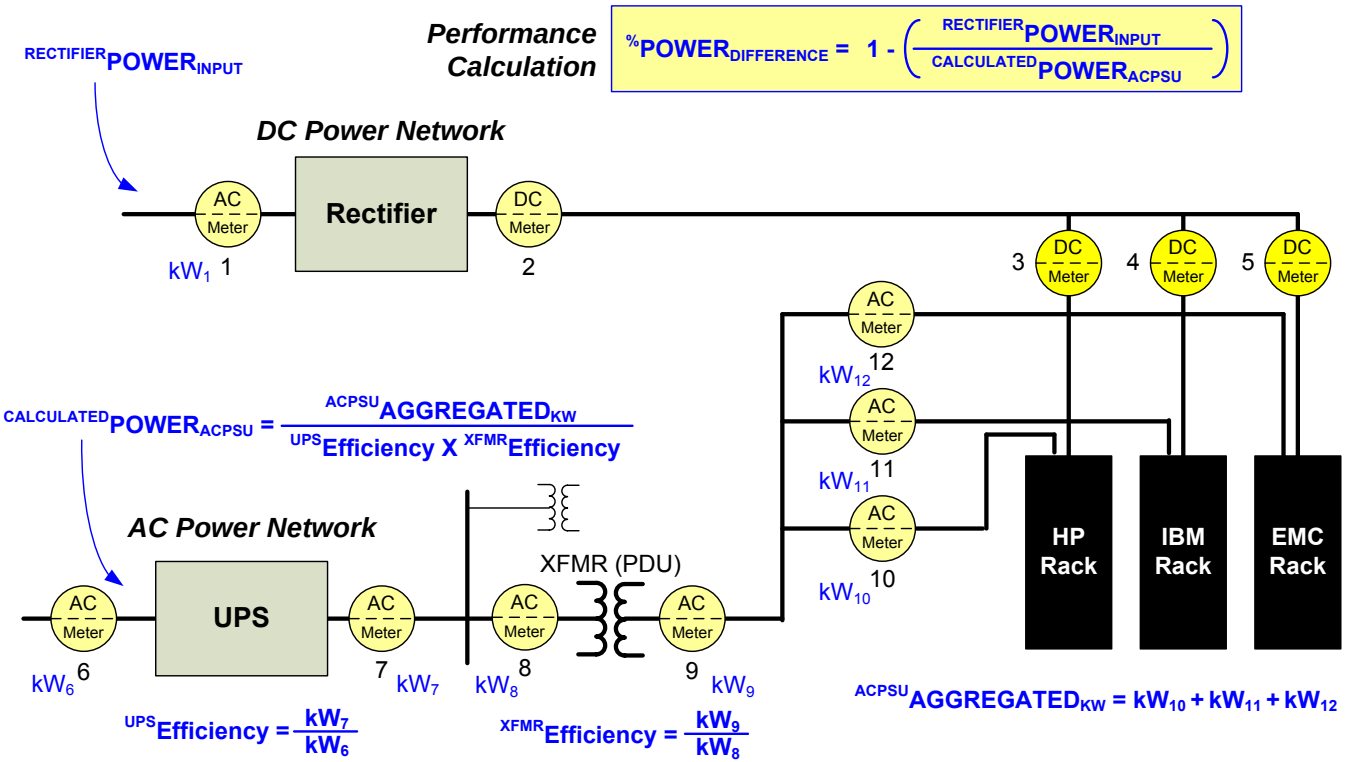

© 2012 Electric Power Research Institute, Inc. All rights reserved.

ELECTRIC POWER RESEARCH INSTITUTE

AC vs DC Comparison Tests

Test	Average Percent Difference Between AC and DC Network
Test 1	15.0%
Test 2	15.3%
Test 3	15.1%
Test 4	15.6%
Test 5	14.9%
Test 6	15.8%
Average	15.3%

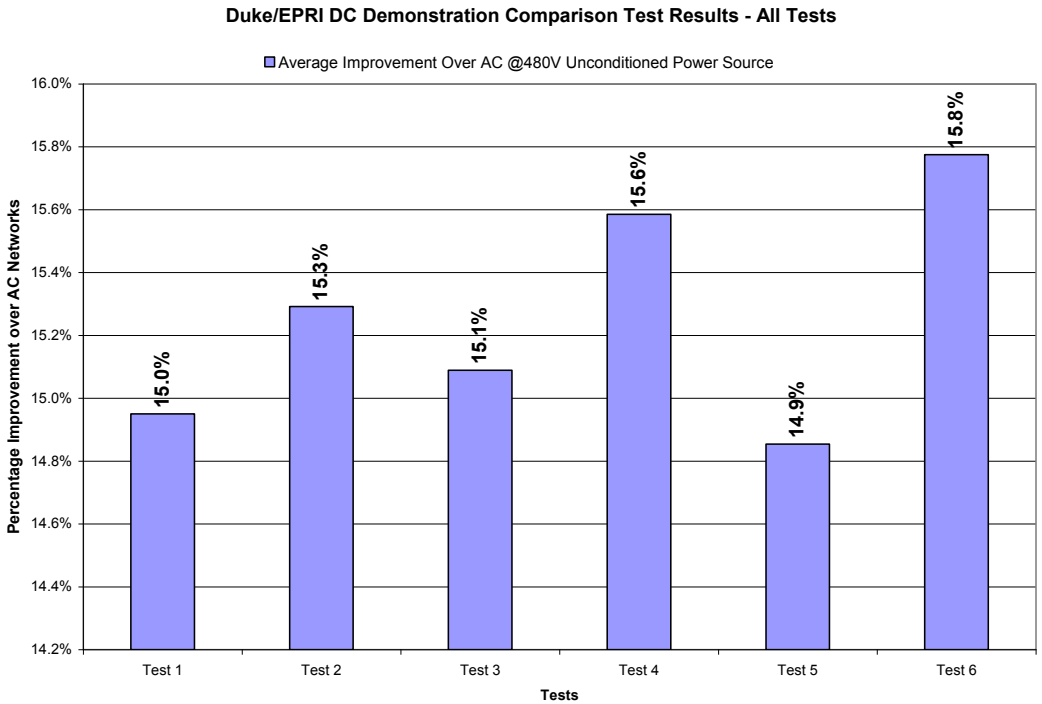

- Test 1 – All servers and storage arrays “on” but “idle” (28 hours)
- Test 2 – IBM and EMC “on” but “idle” (28 hours)
- Test 3 – All servers and storage arrays running at 100% (8 hours)
  - IBM (nStress), HP (Prime95), EMC (IOMeter)
- Test 4 – All servers and storage arrays running at 50% (18 hours)
- Test 5 - All servers and storage arrays running at 100% (51 hours)
- Test 6 – IBM and EMC “on” but “idle” (19 hours)

© 2012 Electric Power Research Institute, Inc. All rights reserved.

Delta Products - DC UPS

- Modular design
- Hot-swappable control module
- 20kW per power module
- Redundancy Configuration

Facility Configuration

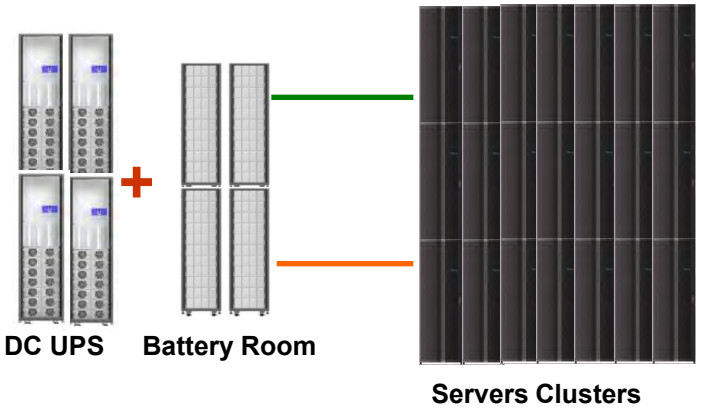

Row Configuration

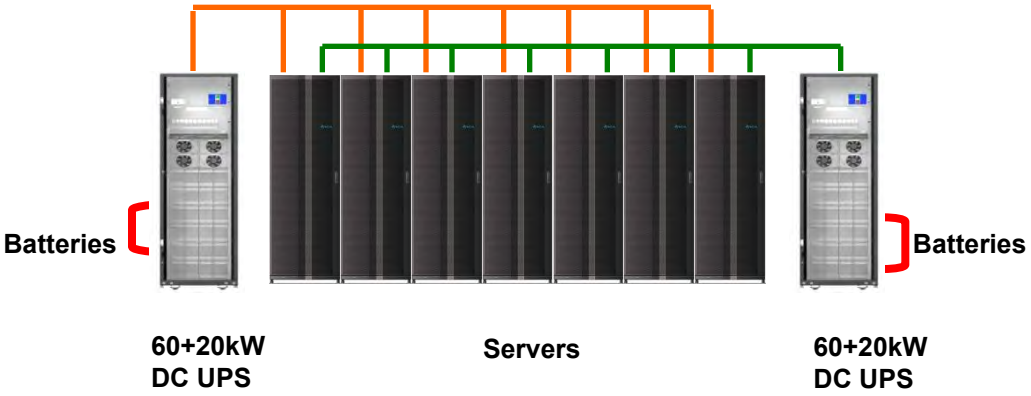

© 2012 Electric Power Research Institute, Inc. All rights reserved.

ELECTRIC POWER RESEARCH INSTITUTE

Emerson Network Power 380V DC Field Trials

Univ. California / EPRI
20kW
AC/DC Efficiency Study

France Telecom
2 x 50kW
Datacenter lab

Nextek
45kW
Building microgrid

Clustered Systems
2 x 105kW
High performance computing

2009 | 2010 | 2011 | 2012

China Mobile
80kW
Lab evaluation

Server OEM
2 x 20kW
Lab

France Telecom
20kW
Telecom office

Server OEM
3 x 30kW
Lab

NTT-A
15kW
Server trial

© 2012 Electric Power Research Institute, Inc. All rights reserved.

EPRI ELECTRIC POWER RESEARCH INSTITUTE

Emerson Network Power - Next Gen System Concept

380V DC Output Load Distribution

Ground Fault Detector

Rectifier Sub-rack

AC Input Section

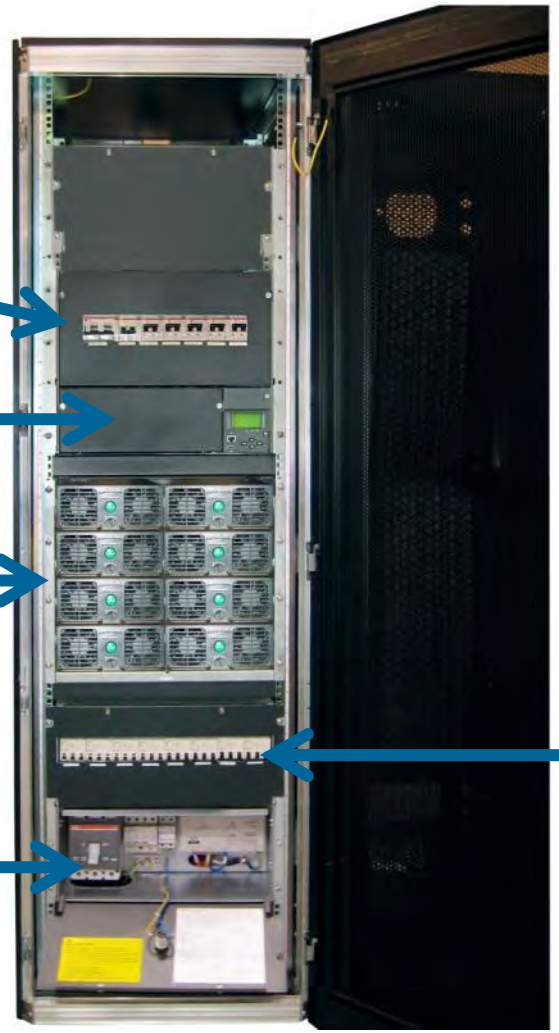

Individual PCU input breakers

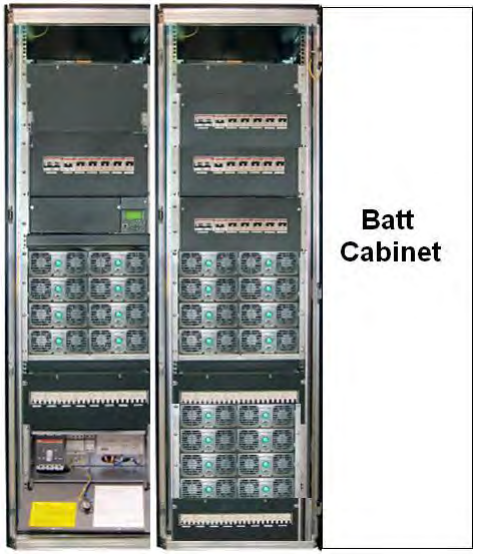

Expansion Potential (200kW+)

© 2012 Electric Power Research Institute, Inc. All rights reserved.

EPRI ELECTRIC POWER RESEARCH INSTITUTE

France Telecom 380VDC Data Center

POWER ROOM
Efficiency AC/380V > 94%

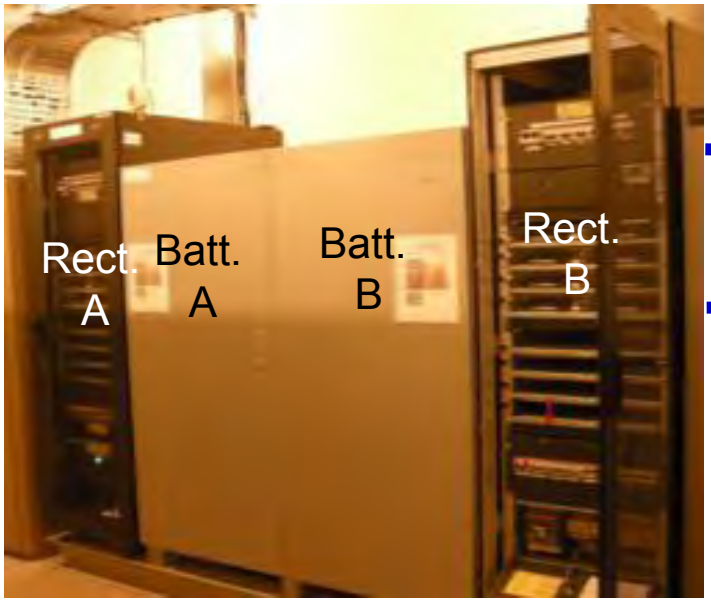

380Vdc A

380Vdc B

SERVER ROOM
DC vs. AC 3 to 5% efficiency gain

IBM Blade 3,5 kW X N and HP C7000 technically ready (under certification)

- -190 / +190 V high resistance midpoint grounded
- Ground fault detection included
- First generation rectifier and system

© 2012 Electric Power Research Institute, Inc. All rights reserved.

EPRI ELECTRIC POWER RESEARCH INSTITUTE

Data Center DC Product Examples

380VDC Power Supplies, Interconnect Cables, Bus Ways, Outlet Strips, Breakers

© 2012 Electric Power Research Institute, Inc. All rights reserved.

380V DC Server Developments

- Server OEMs
  - HP
  - IBM
  - Dell
  - Supermicro
  - NEC
  - EMC
- Networking equipment OEMs
  - Ericsson (Blade Platform)
  - Juniper
  - Huawei

Clustered Systems
High Performance Computing

NEC Introduced 380V DC Server Line

© 2012 Electric Power Research Institute, Inc. All rights reserved.

EPRI ELECTRIC POWER RESEARCH INSTITUTE

Clustered Systems 100kW Rack Overview

- 5 Chassis
  - 80 8U blades
- 100KW power & cooling
  - Non invasive liquid cooling system, high temp capable
  - 480VAC to 380VDC rectifier in first version
- Open System
  - Compute, network, storage etc.
- All electronics field replaceable

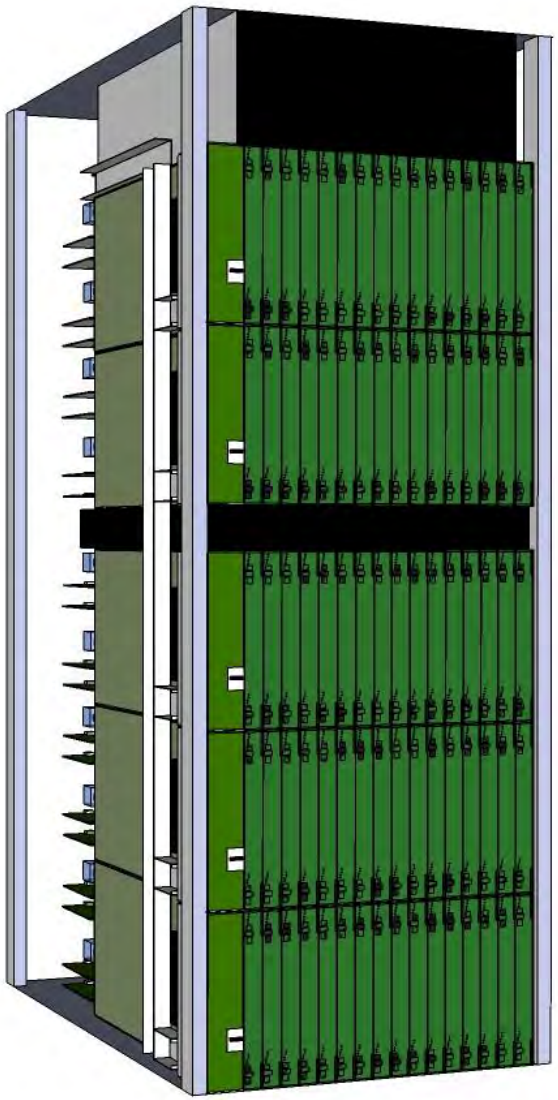

© 2012 Electric Power Research Institute, Inc. All rights reserved.

EPRI ELECTRIC POWER RESEARCH INSTITUTE

Clustered Systems Compute Blade

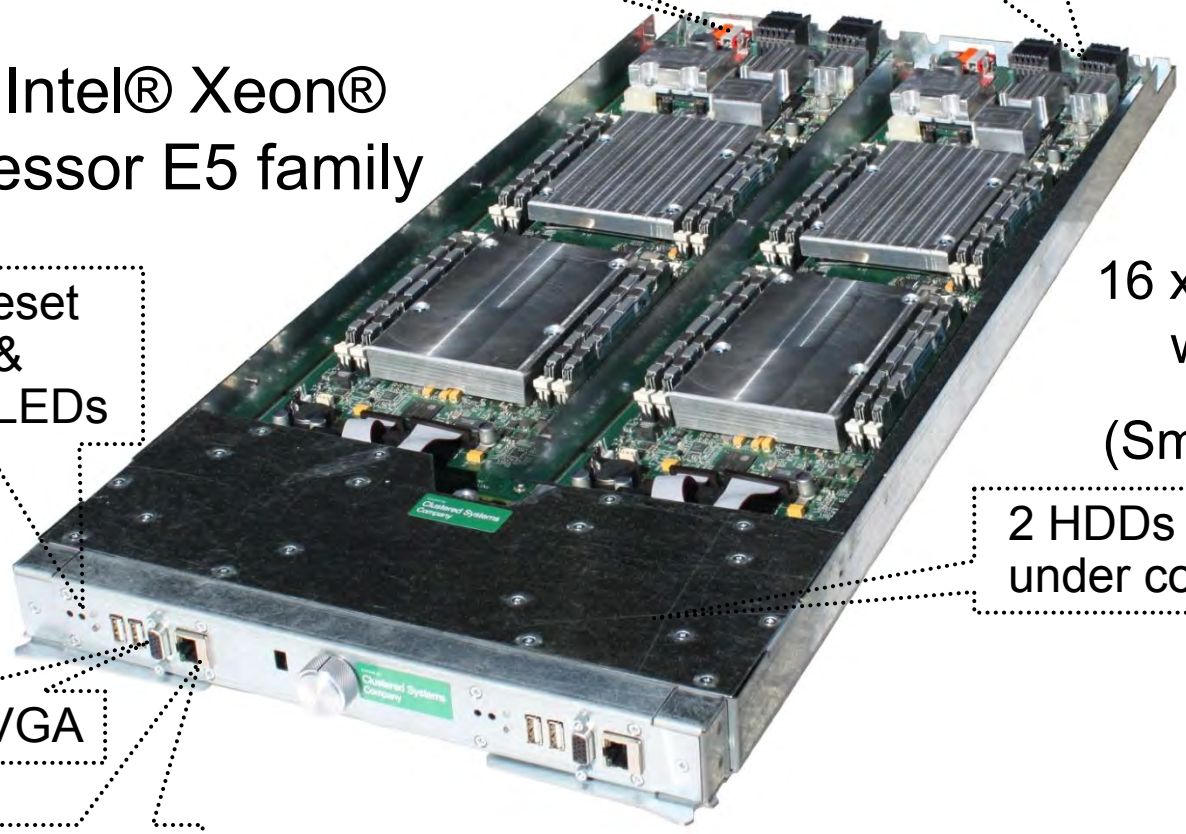

© 2012 Electric Power Research Institute, Inc. All rights reserved.

EPRI ELECTRIC POWER RESEARCH INSTITUTE

Clustered Systems Power Train

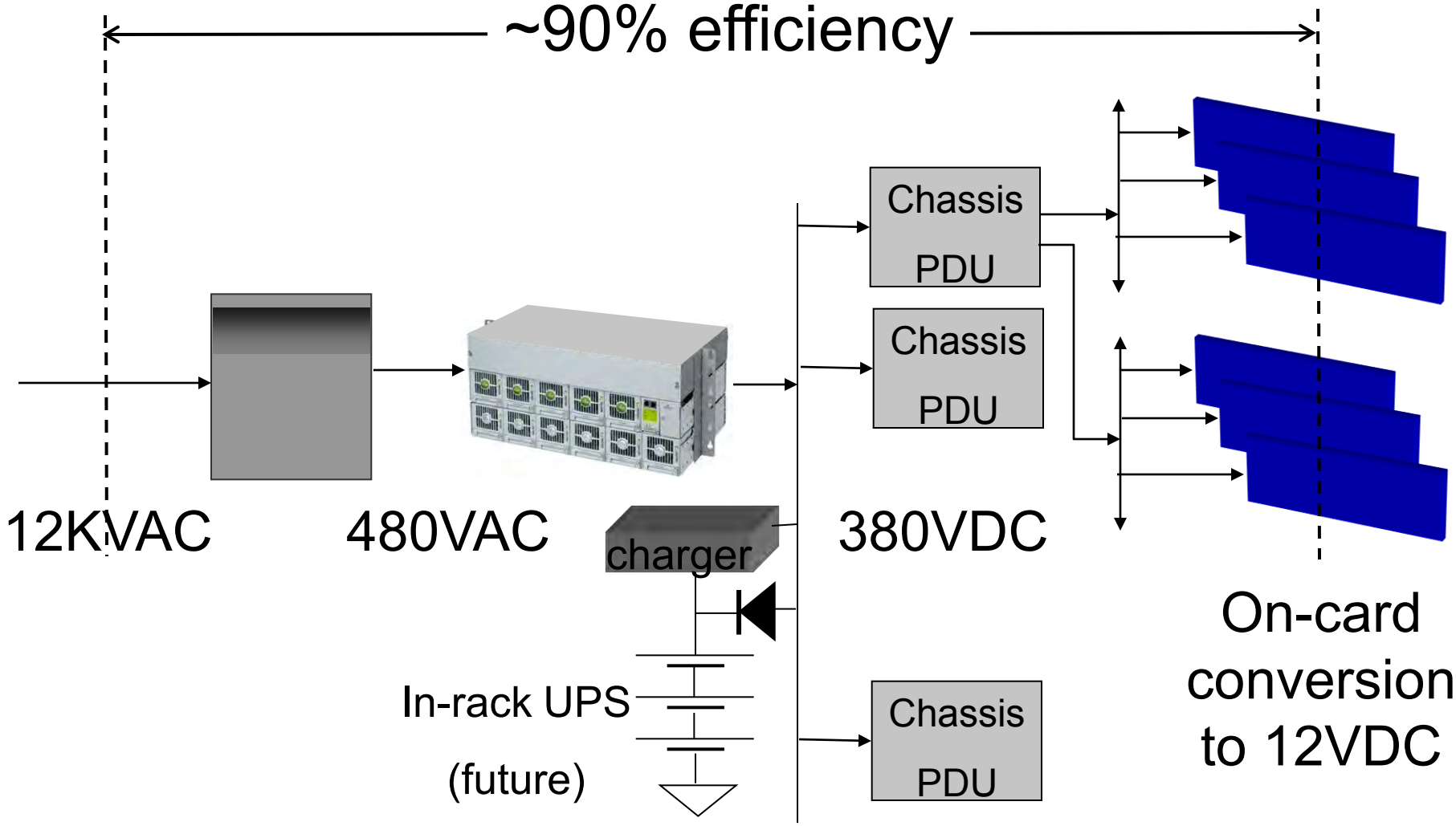

© 2012 Electric Power Research Institute, Inc. All rights reserved.

ELECTRIC POWER RESEARCH INSTITUTE

The Sine Amplitude Converter (SAC)

- Fixed-ratio, DC-DC transformer
  - Sine Amplitude proportional to load
  - “Voltage Transformer” or “Current Multiplier”
  - ZVS, ZCS (Low loss, low noise)
  - MHz switching
  - ~100% duty cycle down to < 1V
  - Cycle-by-cycle transient response
  - Negligible series impedance
  - 2x transient current capability
- Used in Bus Converter Modules (BCMs) and Intermediate Bus Converters (IBCs)

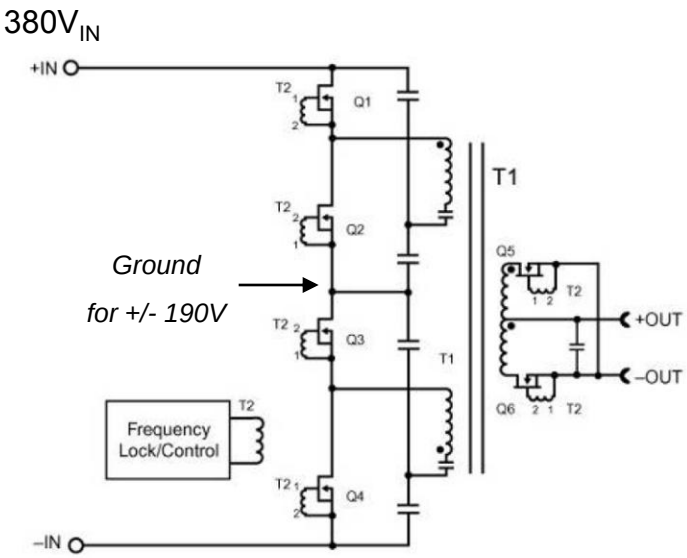

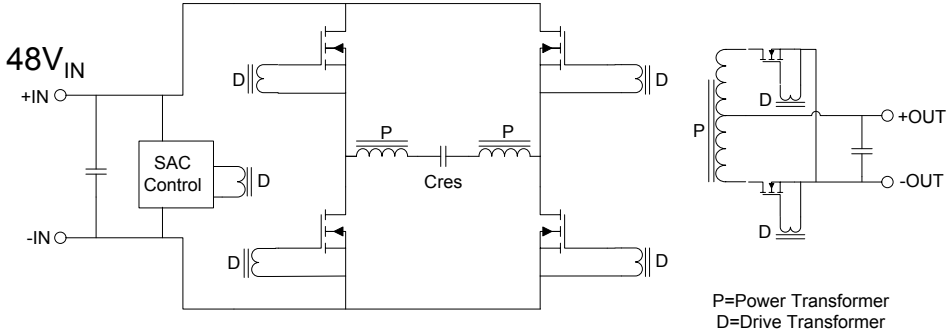

© 2012 Electric Power Research Institute, Inc. All rights reserved.

Today's Solutions

- Sine Amplitude Converters (SACs): Efficiency, Power Density
- HV bus to LV point-of-load converters

Part#	V_{IN} (nom, V)	V_{OUT} (nom, V)	K-Factor	P_{OUT} (nom, W)	Efficiency (pk, %)	Power Density Pd (W/in^3)	Size (L x W x H (in))	Format	
BCM384F480T325A00	384	48	1/8	325	>95%	1,100	1.28 x 0.87 x 0.265	V•I Chip (full)	
B384F120T30	384	12	1/32	300	>95%	1,000	1.28 x 0.87 x 0.265		
BCM48BF120T300A00	48	12	1/4	300	>95%	1,100	1.28 x 0.87 x 0.265		
BCM48BH120T100A00	48	12	1/4	120	>95%	800	0.65 x 0.87 x 0.265	V•I Chip (half)	
IB048E120T40N1-00	48	12	1/4	500	98%	395	2.3 x 1.45 x 0.38	1/8 Brick	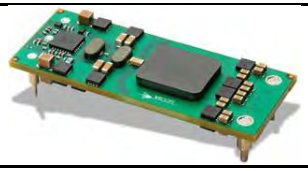
IB050Q096T80N1	48	9.6	1/5	850	98%	460	2.3 x 1.45 x 0.545	1/4 Brick	

© 2012 Electric Power Research Institute, Inc. All rights reserved.

Clustered Systems 20’ Container

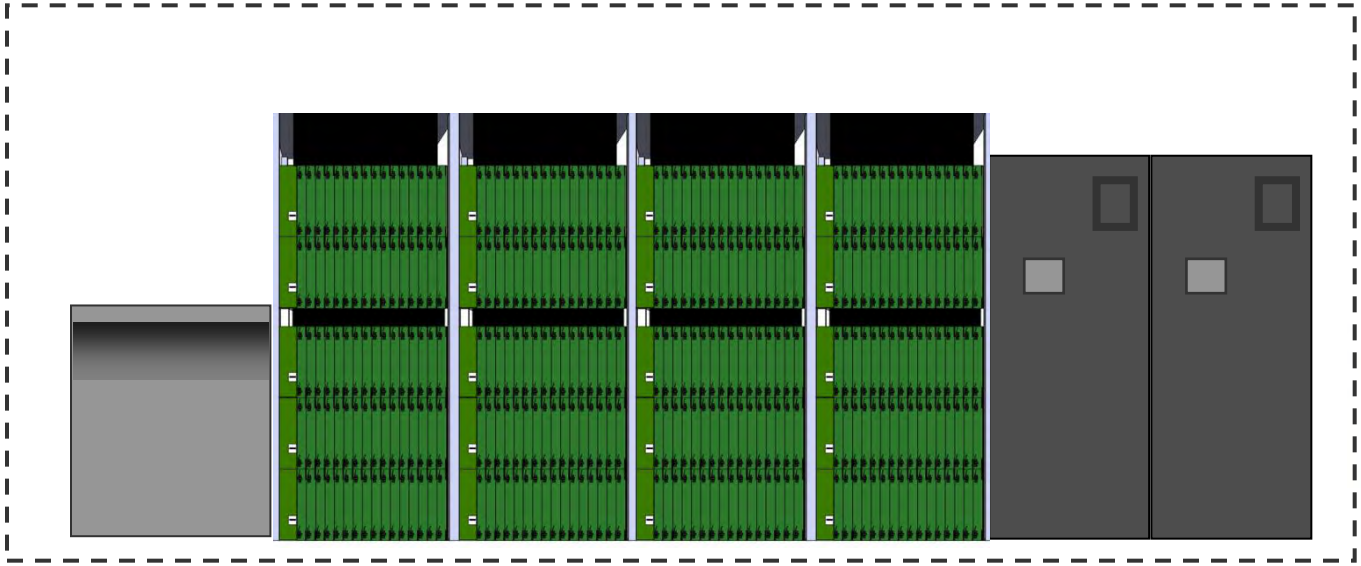

12KV-480VAC

400KVA Xfmr

CSys Racks

2 x Liebert XDP

Adiabatic cooler+

chiller (optional*)

*Very hot climates

- Capacity: 640 Servers
- 400KW power and cooling
- Infrastructure cost ~$1,000 per server

© 2012 Electric Power Research Institute, Inc. All rights reserved.

EPRI ELECTRIC POWER RESEARCH INSTITUTE

480 – 208Y/120 VAC System Cost Comparison Diagram

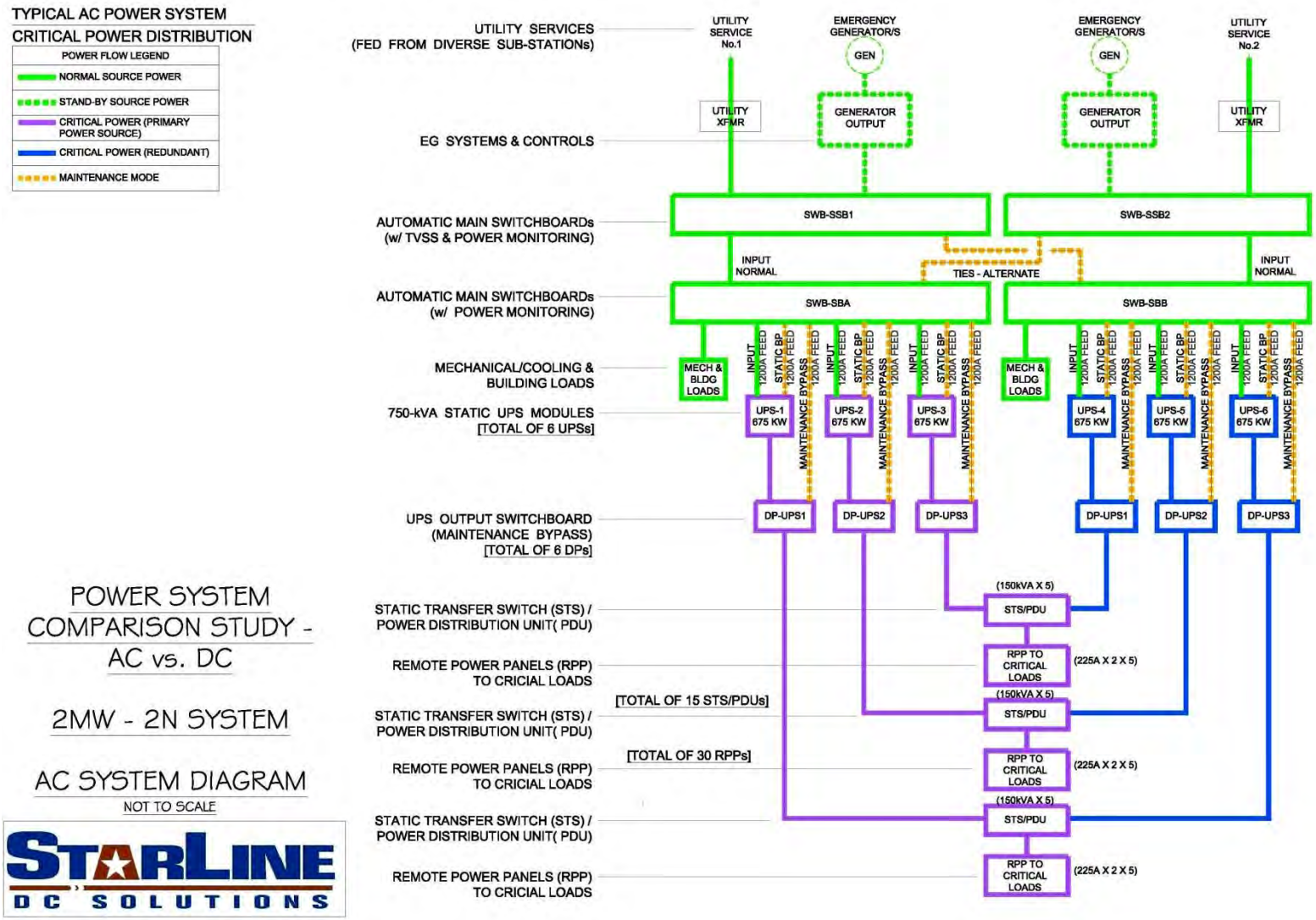

POWER SYSTEM COMPARISON STUDY - AC vs. DC

2MW - 2N SYSTEM

AC SYSTEM DIAGRAM

NOT TO SCALE

STARLINE DC SOLUTIONS

© 2012 Electric Power Research Institute, Inc. All rights reserved.

EPRI ELECTRIC POWER RESEARCH INSTITUTE

380 VDC System Cost Comparison Diagram

(15% Less CAP-EX and 35% Less OP-EX)

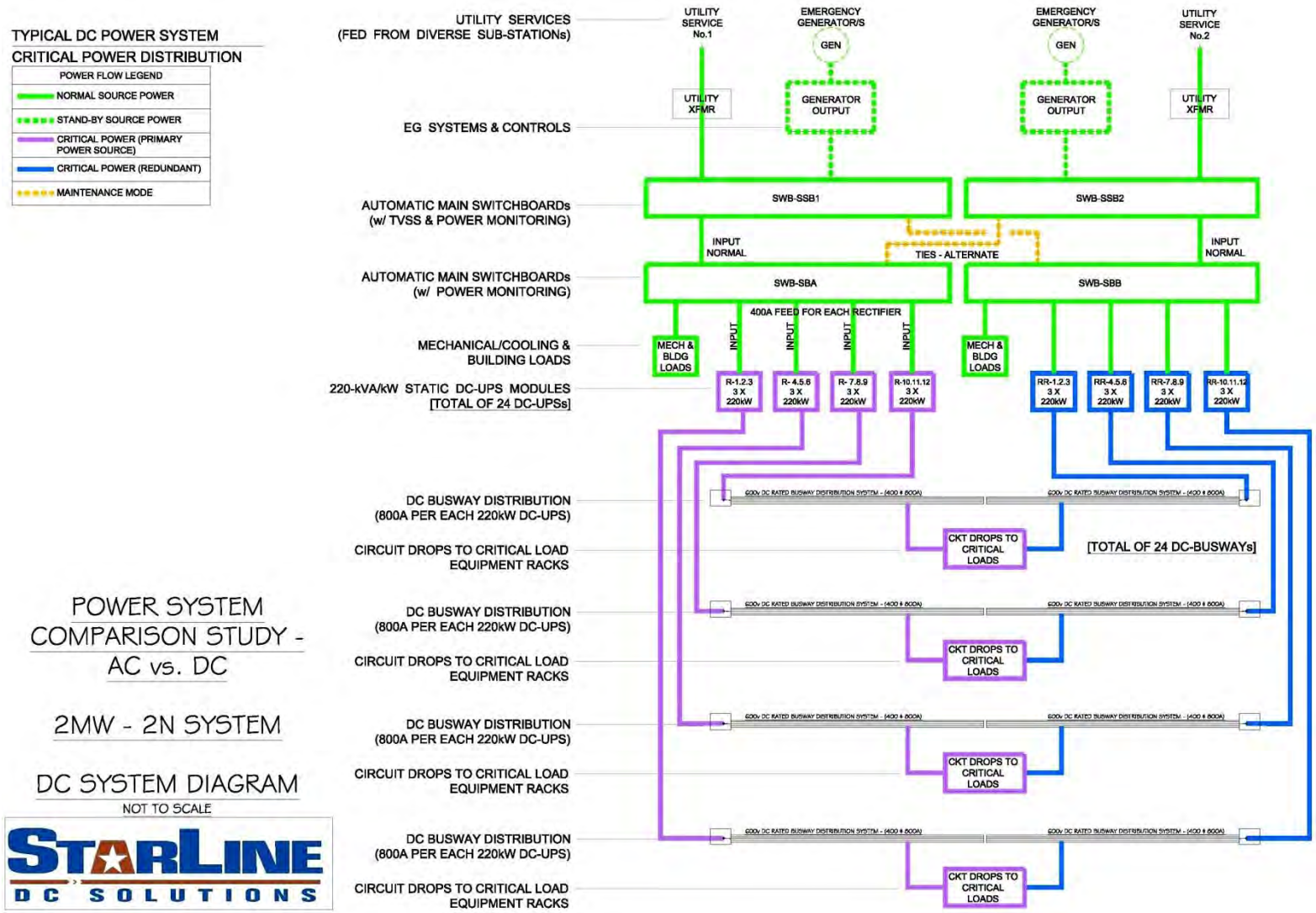

© 2012 Electric Power Research Institute, Inc. All rights reserved.

EPRI ELECTRIC POWER RESEARCH INSTITUTE

Why 380VDC? – "Sweet Spot"

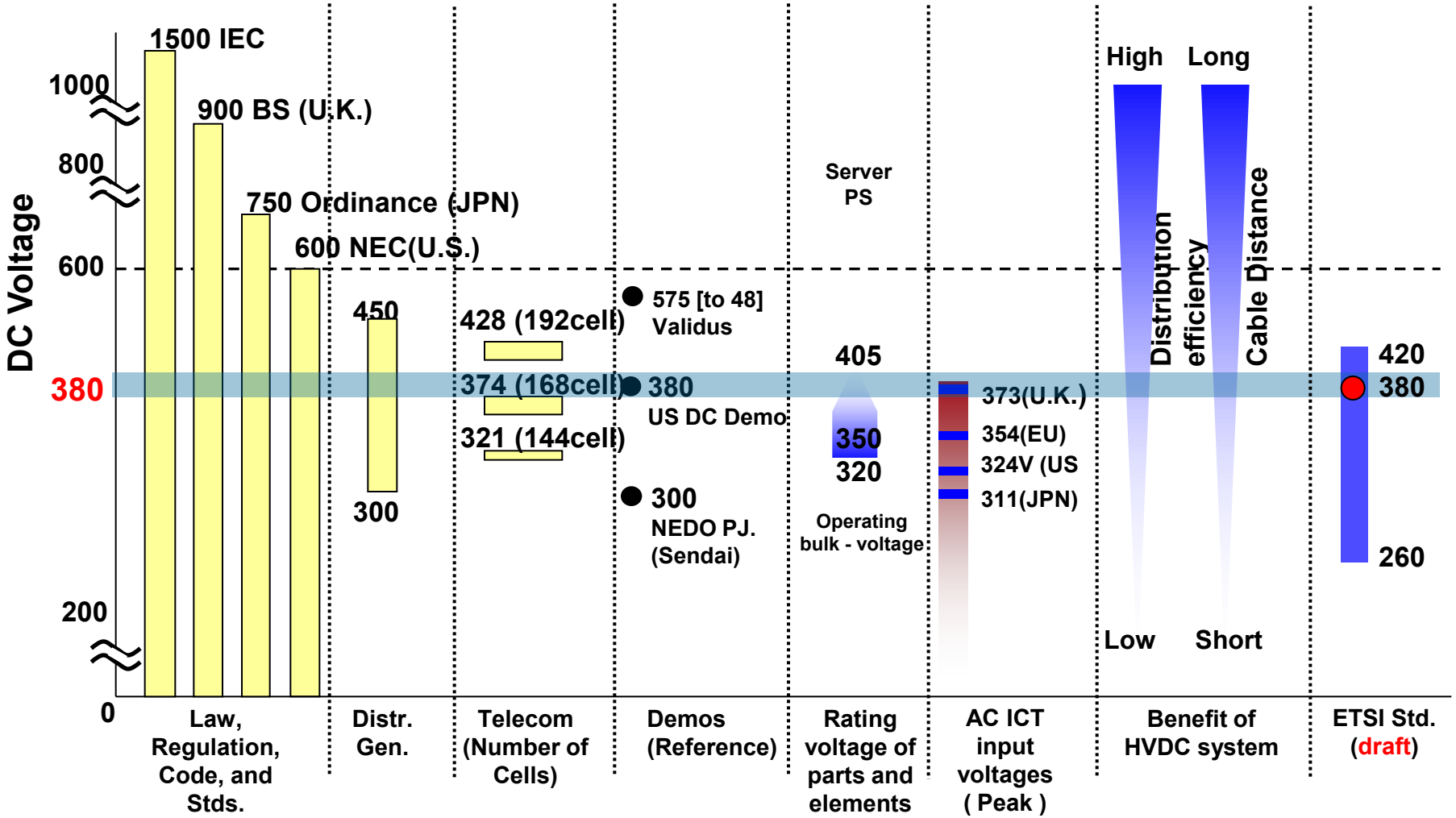

Edited from source: NTT FACILITIES, INC.

© 2012 Electric Power Research Institute, Inc. All rights reserved.

EPRI ELECTRIC POWER RESEARCH INSTITUTE

ITI(CBEMA) VAC Operating Ranges

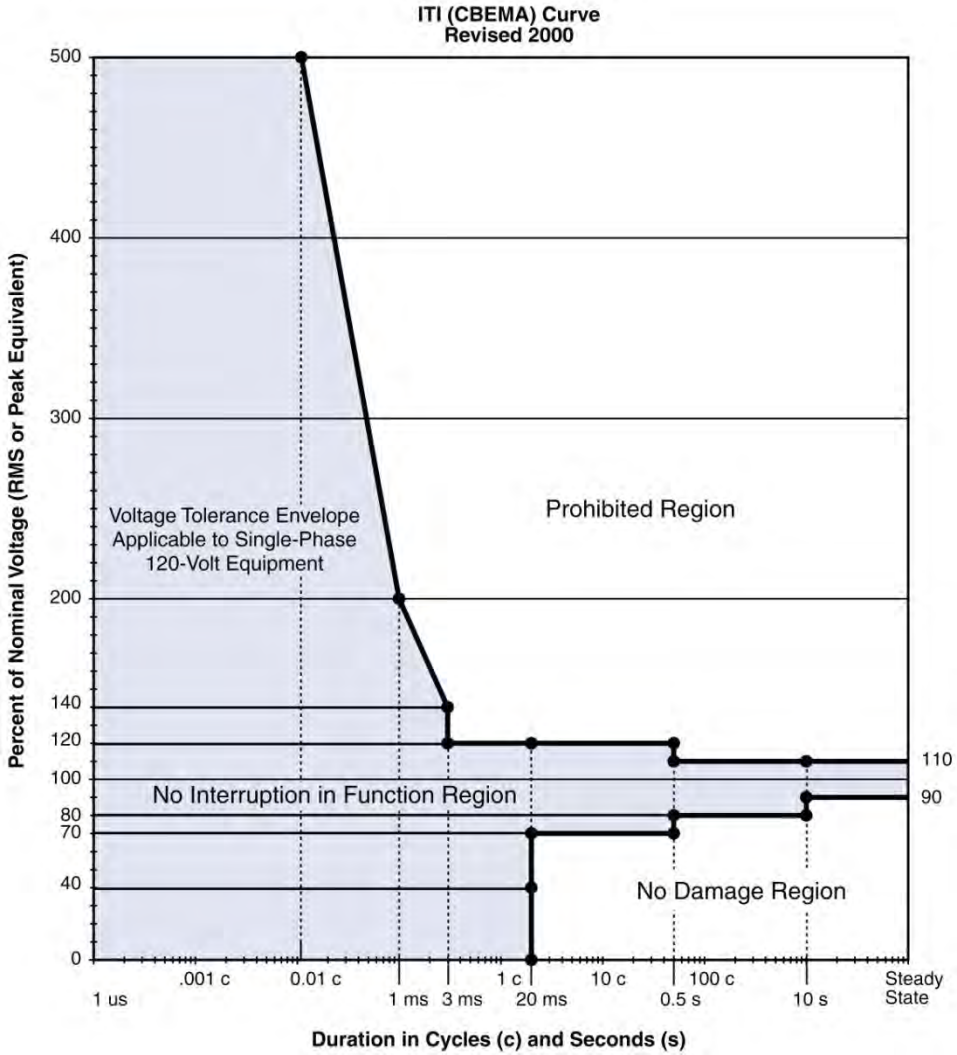

© 2012 Electric Power Research Institute, Inc. All rights reserved.

ELECTRIC POWER RESEARCH INSTITUTE

380VDC Operating Range

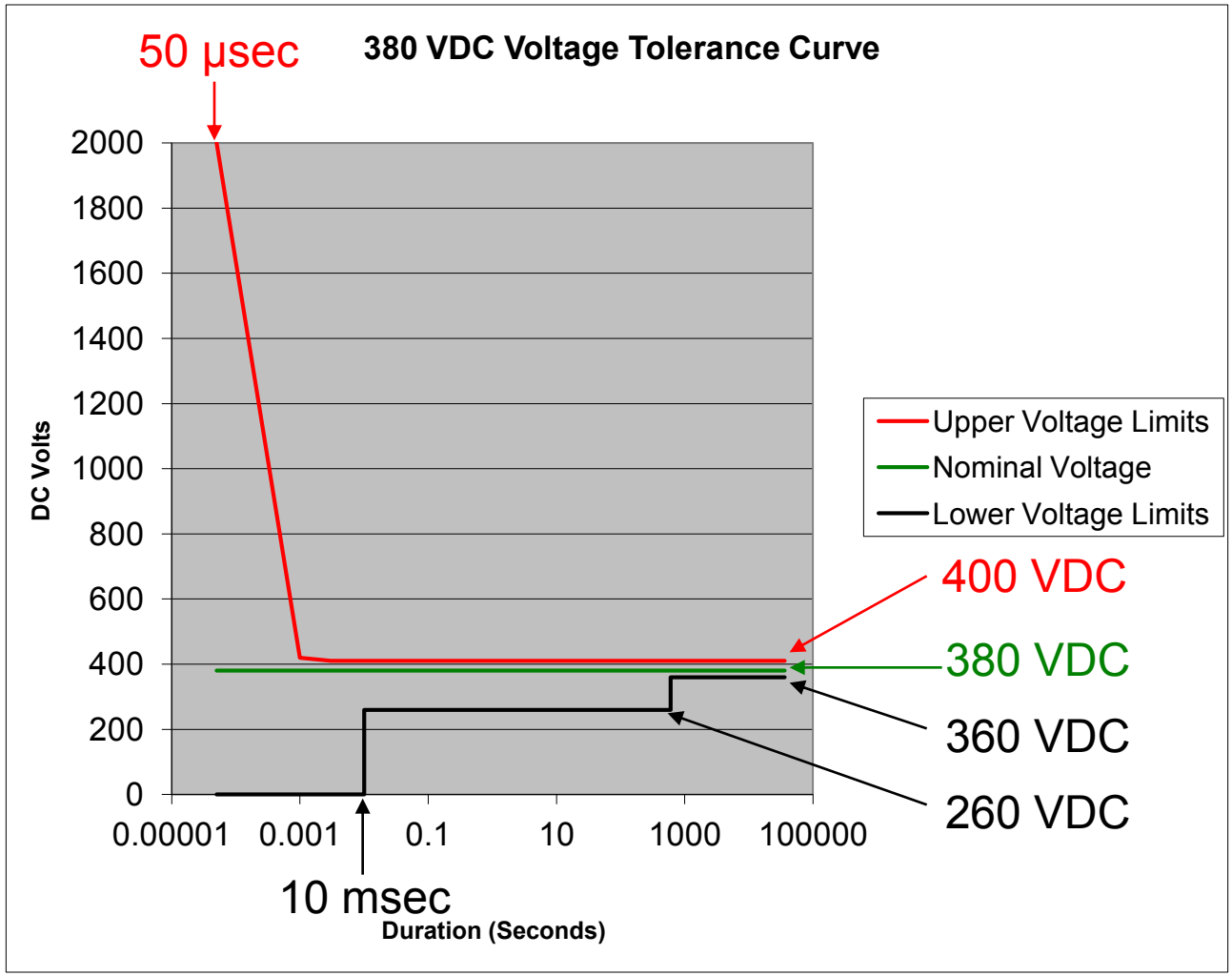

© 2012 Electric Power Research Institute, Inc. All rights reserved.

ELECTRIC POWER RESEARCH INSTITUTE

380VDC Power Distribution

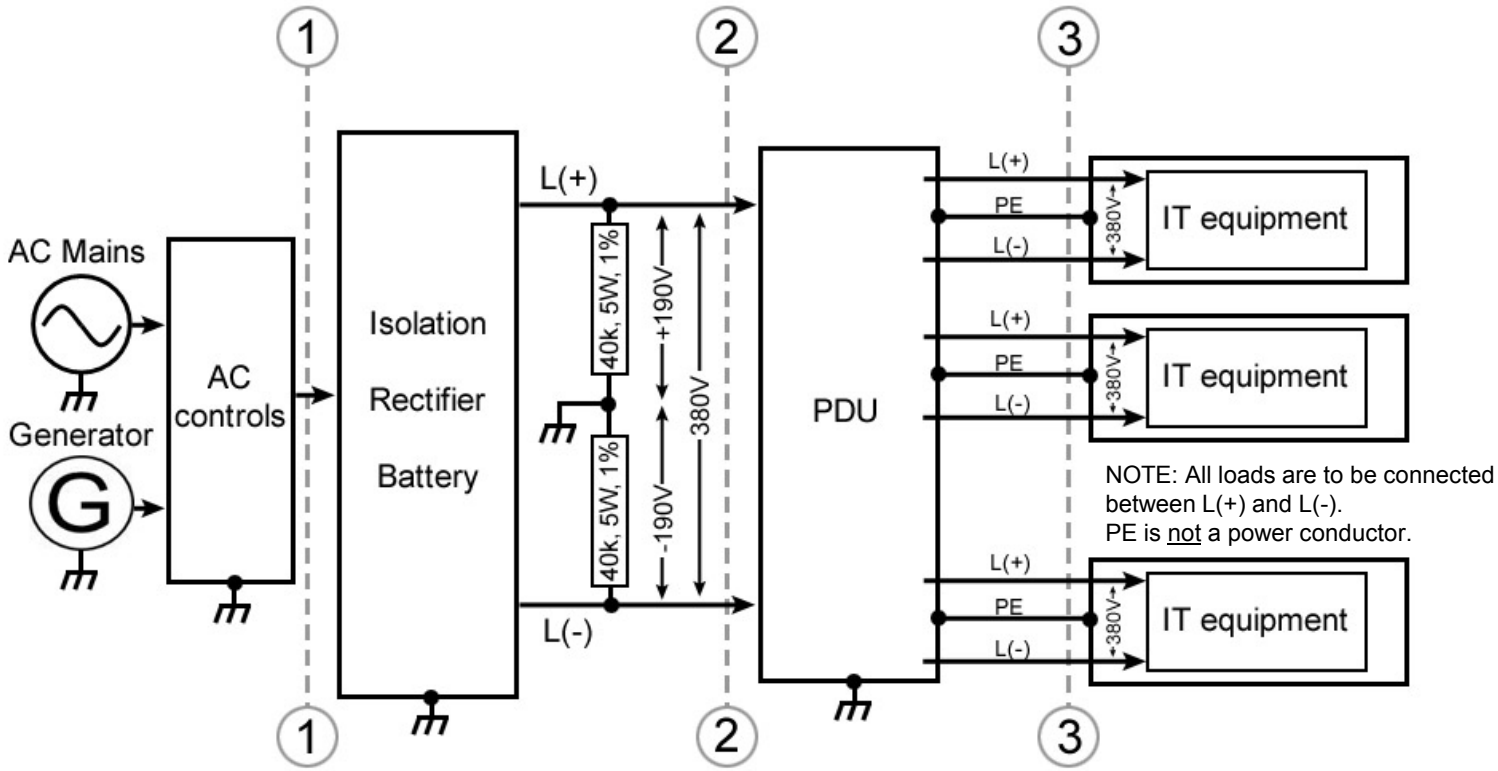

© 2012 Electric Power Research Institute, Inc. All rights reserved.

ELECTRIC POWER RESEARCH INSTITUTE

Easier Integration Of Renewables

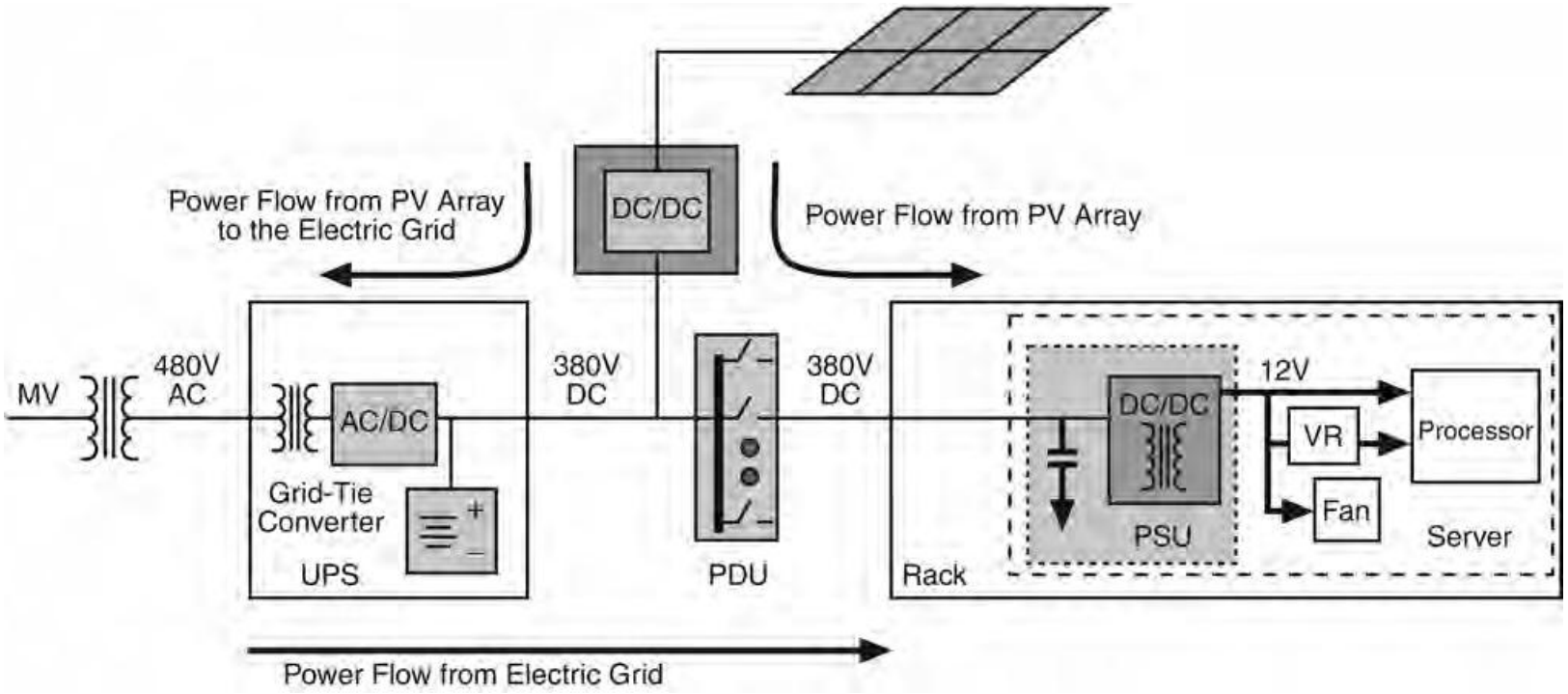

Reference to Nextek Power Systems US Patent 7,872,375 18JAN2011

© 2012 Electric Power Research Institute, Inc. All rights reserved.

Benefits Summary Of 380VDC

- Higher Reliability
  - Fewer Conversions/Fewer Points Of Failure
- Higher Efficiency
  - Higher Efficiency Power Supplies & UPS
  - No PDU Transformer Needed
- Smaller Size
- Better Power Quality
- Easier Integration Of Renewable Energy
- Easier Integration of Energy Storage

© 2012 Electric Power Research Institute, Inc. All rights reserved.

380VDC Challenges

- Standardizing the DC Voltage
  - 380VDC looking like the leading candidate
  - Safety Agency Approval/Listing (e.g. UL)
  - DC & AC Products Both Need These Approvals
- Paradigm Shift
  - Back To Some Of Thomas Edison's DC Ideas
  - We Are Used To The "AC" World Today
- Vendor Selection
  - Many AC Vendors To Choose From
  - Fewer DC Vendors Available --- At Least For Now

© 2012 Electric Power Research Institute, Inc. All rights reserved.

Safety - Physiological Effects of DC and AC

- AC or DC above 30 volts can be potentially dangerous and cause involuntary muscle action (tetanus)
- Low frequency (50 to 60Hz) AC can be 3 to 5 times more dangerous than DC of same voltage and amperage because:
  - Muscle contraction:
    - AC: multiple contractions may freeze the hand to the power source
    - DC: single contraction usually forces the hand away from the source
  - Heart fibrillation:
    - AC: can cause fibrillation at 50-60 Hz; may not restart on its own after power is removed
    - DC: makes the heart still, heart can restart once power is removed
- Shock currents occur between line and ground – must be aware of fault currents and grounding methodology
  - Current thresholds for bodily effect are higher with DC circuits
    - Ex: Severe pain is felt at 23mA in 60Hz AC circuit; not until 90mA in a DC circuit

© 2012 Electric Power Research Institute, Inc. All rights reserved.

Limiting Fault Current Potential at 400V DC with High Resistance Midpoint Grounding (HRMG)

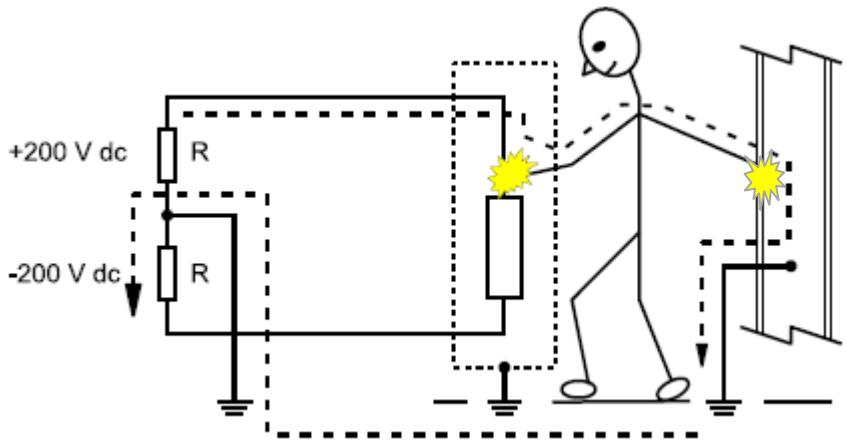

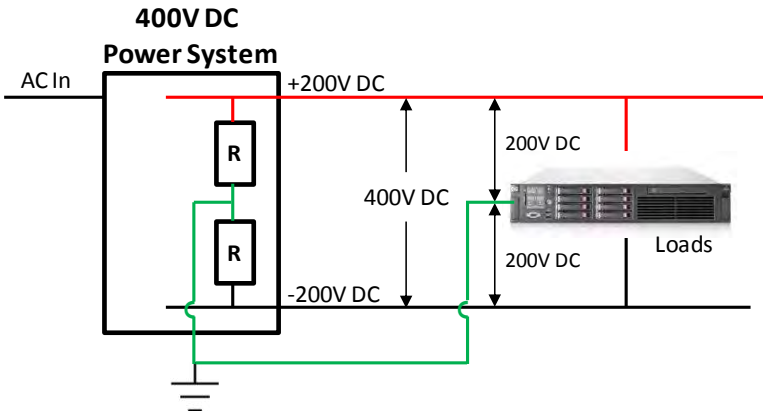

- At high R value (50-200+kΩ), human body current for line to ground fault ≈7.5mA
  - Corresponds to IEC Zone II → No dangerous effects
  - Fault current potential equivalent to 48V DC
  - No arc flash to ground during single ground fault with HRMG
- HRMG is widely used in 110V/220V DC applications in industrial, utility and railway environments
  - Requires ground fault detection to ensure only one connection to ground

NTT NTTFACILITIES orange

© 2012 Electric Power Research Institute, Inc. All rights reserved.

EPRI ELECTRIC POWER RESEARCH INSTITUTE

Body Current/Duration Characteristics for Hand-to-Hand Pathway, IEC/TR 60479-5

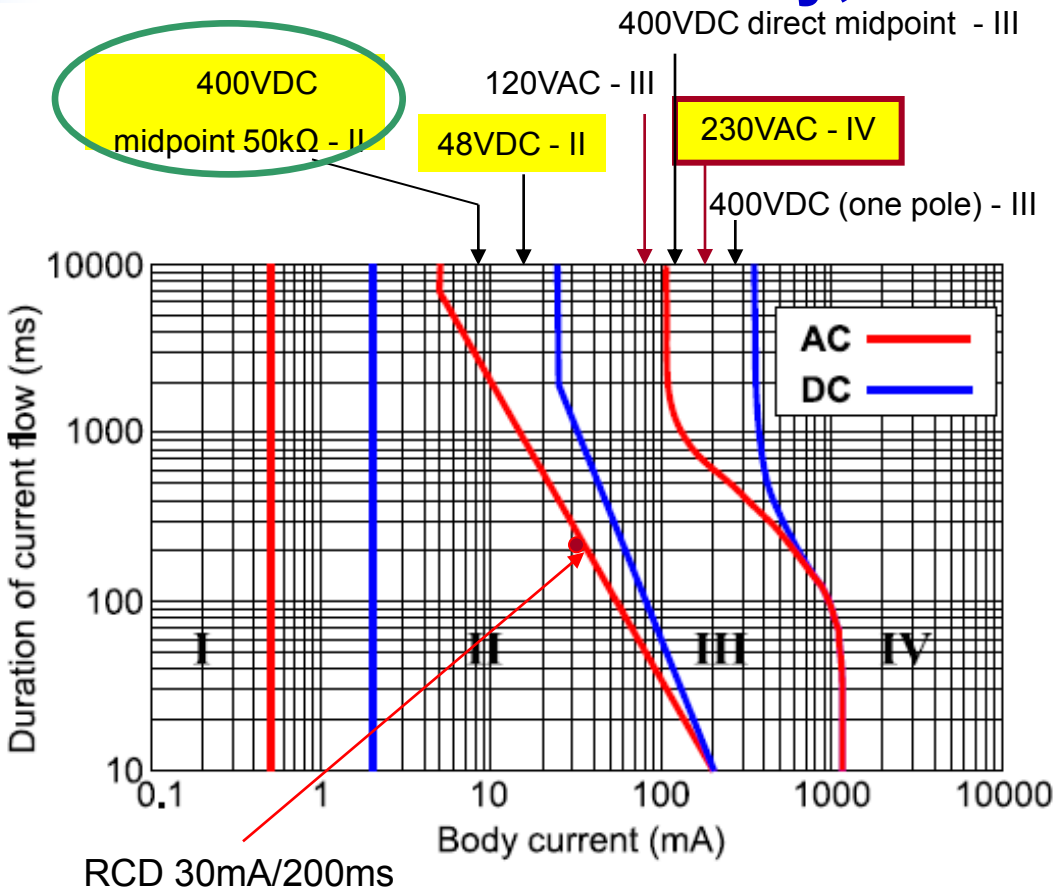

I - Normally no perception

II - No dangerous physiological effect, risk of startle reaction

III - Risk of muscular reaction

IV - Critical effects, risk of ventricular fibrillation

Average human body resistance =1500 ohm (200-400V)

Hand-to-hand pathway	Min long duration current	
	AC	DC
Startle reaction	0.5 mA	2 mA
Strong muscular reaction	5 mA	25 mA
Ventricular fibrillation	100 mA	350 mA

Ventr. fibrill. (feet-to-hand)	40 mA	140 mA

RCD –residual current device (in US and Canada also known as GFI or GFCI)

© 2012 Electric Power Research Institute, Inc. All rights reserved.

Together…Shaping the Future of Electricity

© 2012 Electric Power Research Institute, Inc. All rights reserved.

ELECTRIC POWER RESEARCH INSTITUTE