Oak Ridge National Laboratory
Computing and Computational Sciences

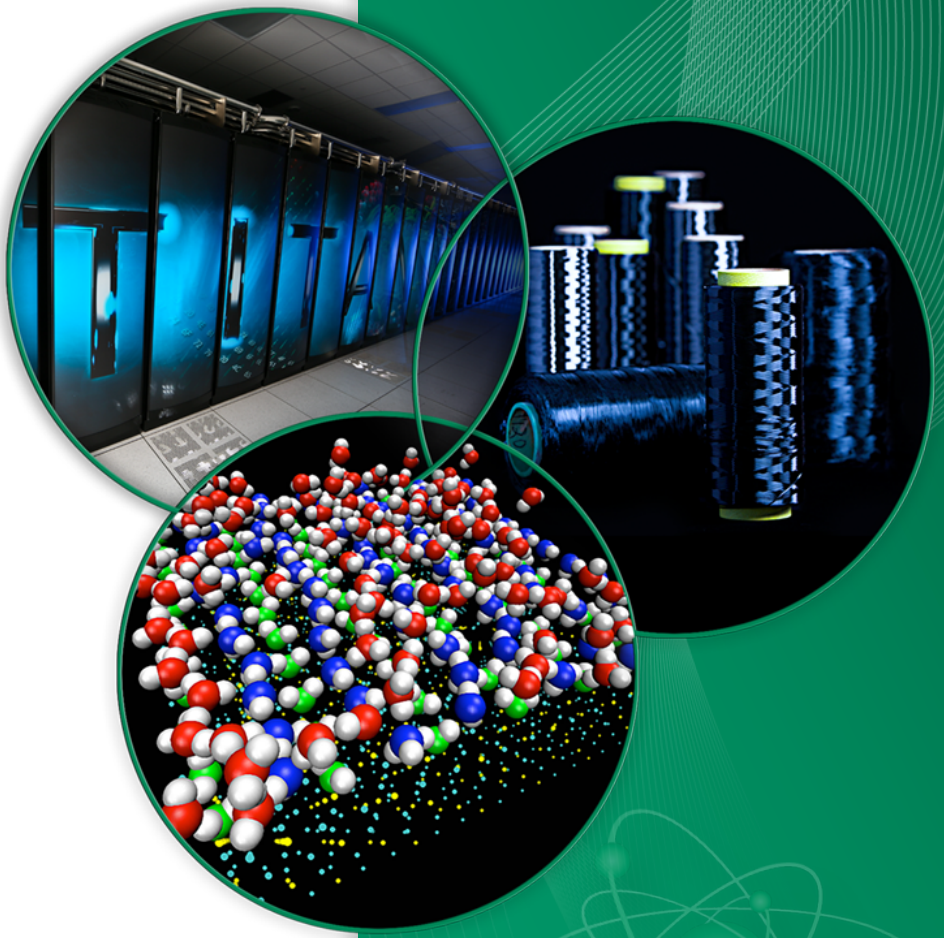

How to Calculating ITUE: A Personal Experience

Presented by:

Chung-Hsing Hsu, ORNL

hsuc@ornl.gov

Birds of a Feather
Total Power Usage Effectiveness: A New Take on PUE
November 20, 2013

What is ITUE?

- An energy-efficiency metric for IT equipment.
- “PUE inside the IT equipment”.
- An ITUE of 3 means 2/3 of energy is “wasted”.
- The lower the value, the better.
- [Patterson, ISC’13]

$$\text{ITUE} = \frac{\text{total energy into the IT equipment}}{\text{total energy into the compute components}}$$

The Context

- The Jaguar supercomputer hosted at ORNL.
- 200 Cray XT5 cabinets and 48 XDP (liquid-cooling) units.
- 24 blades and 1 blower (air-cooling) per cabinet.
- 4 compute nodes and SeaStar2+ interconnect per blade.
- 2 six-core AMD Opteron CPUs per node.
- 8GB memory per CPU.
- 4,672 compute blades and 128 service blades in total.
- Rank 1st in the Top500's November 2009 List.

The Context

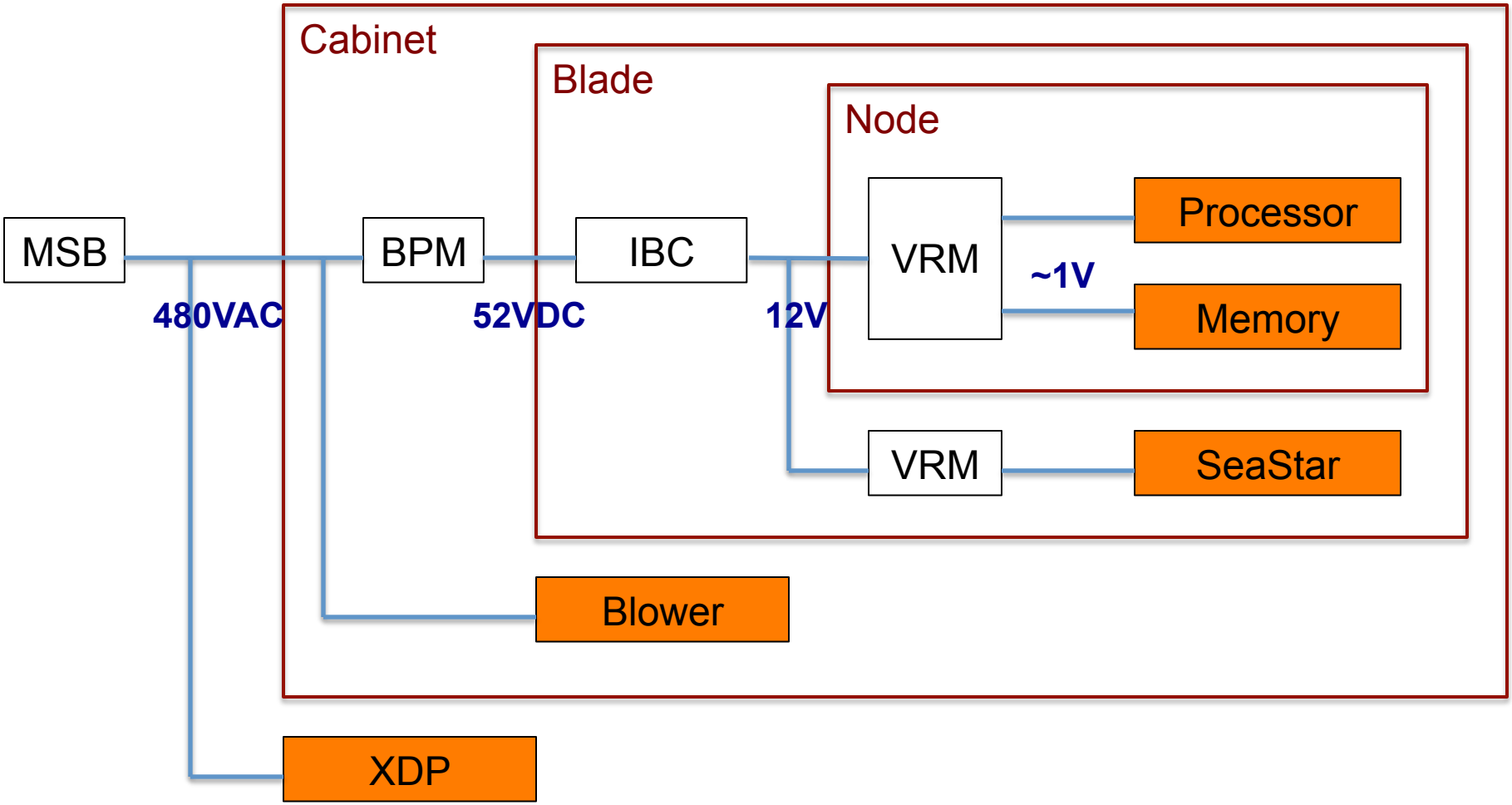

Information courtesy of Rob Rongstad, Cray Inc.

Approach 1

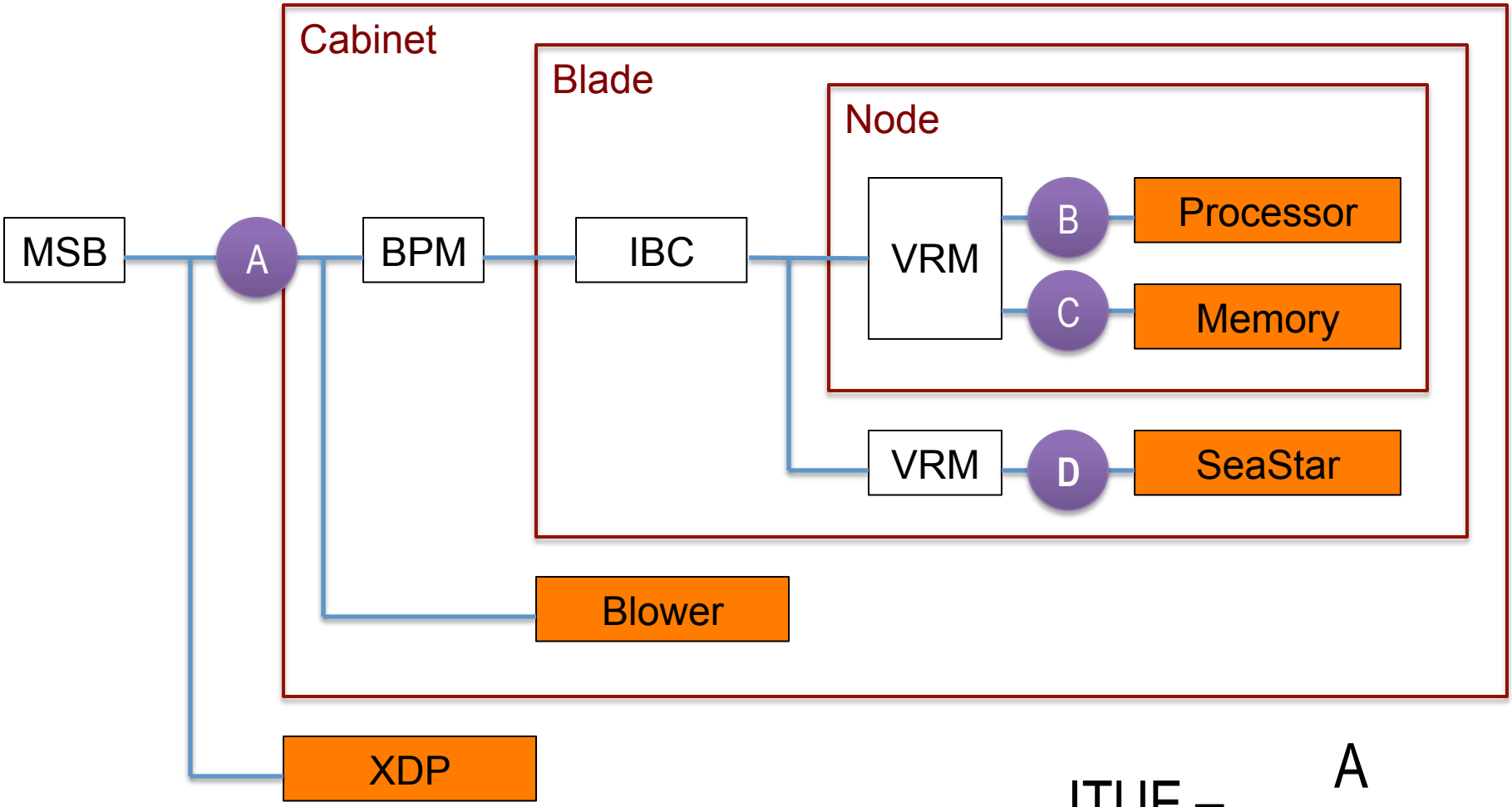

$$ITUE = \frac{A}{B + C + D}$$

Information courtesy of Rob Rongstad, Cray Inc.

Approach 1 (Variant)

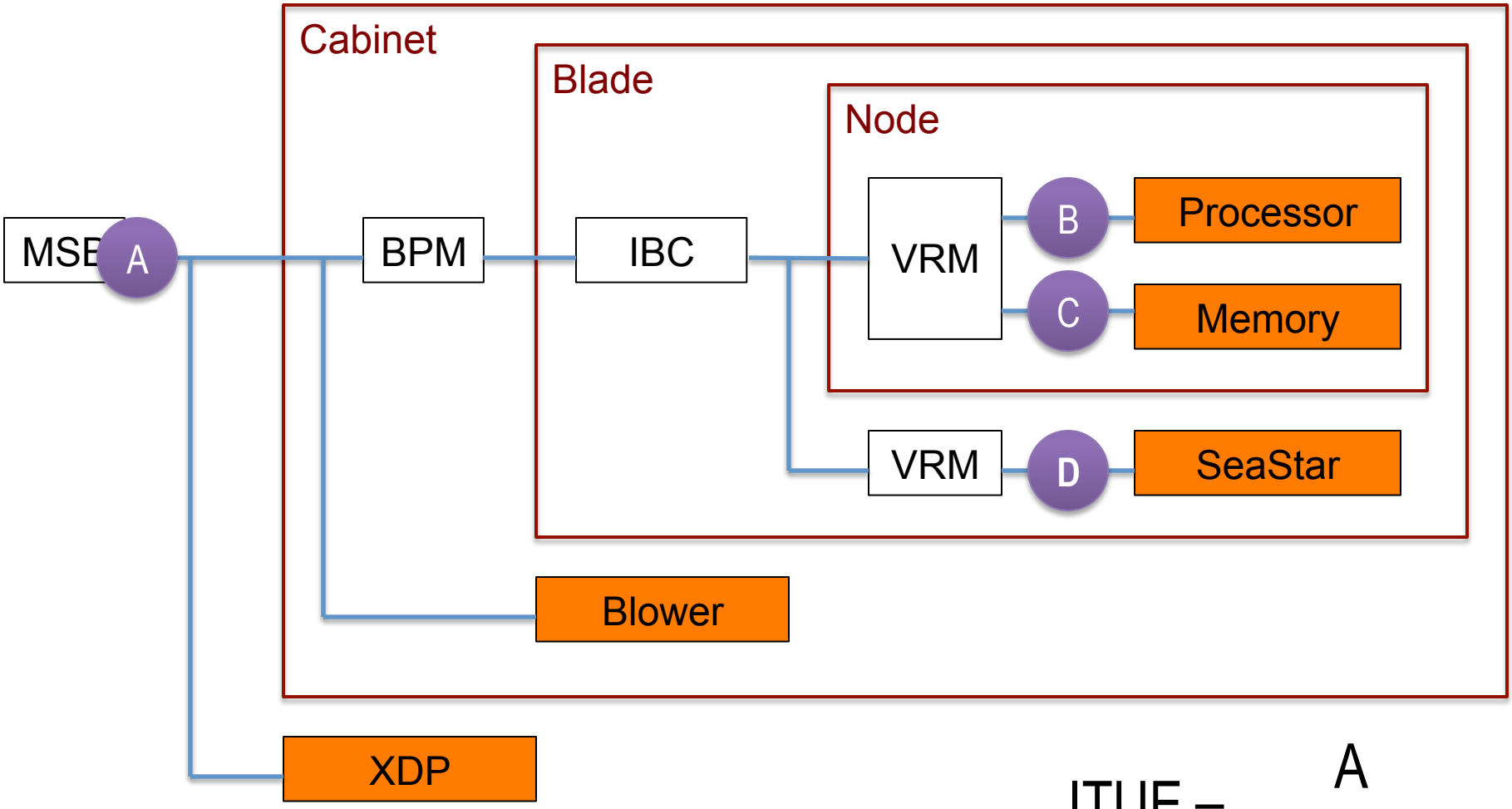

$$\text{ITUE} = \frac{A}{B + C + D}$$

Information courtesy of Rob Rongstad, Cray Inc.

Approach 2

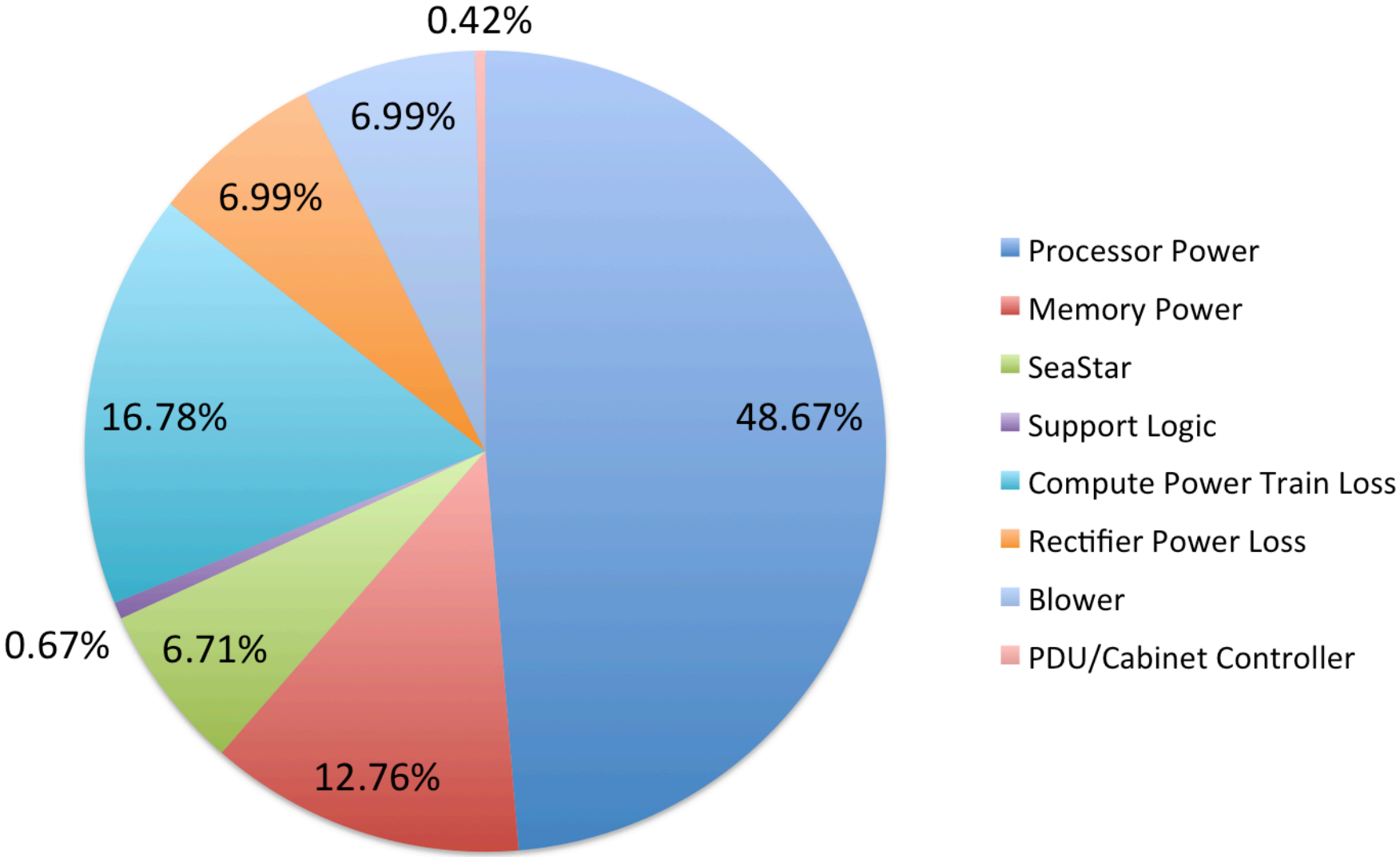

[Rogers, CUG'09]

Approach 2

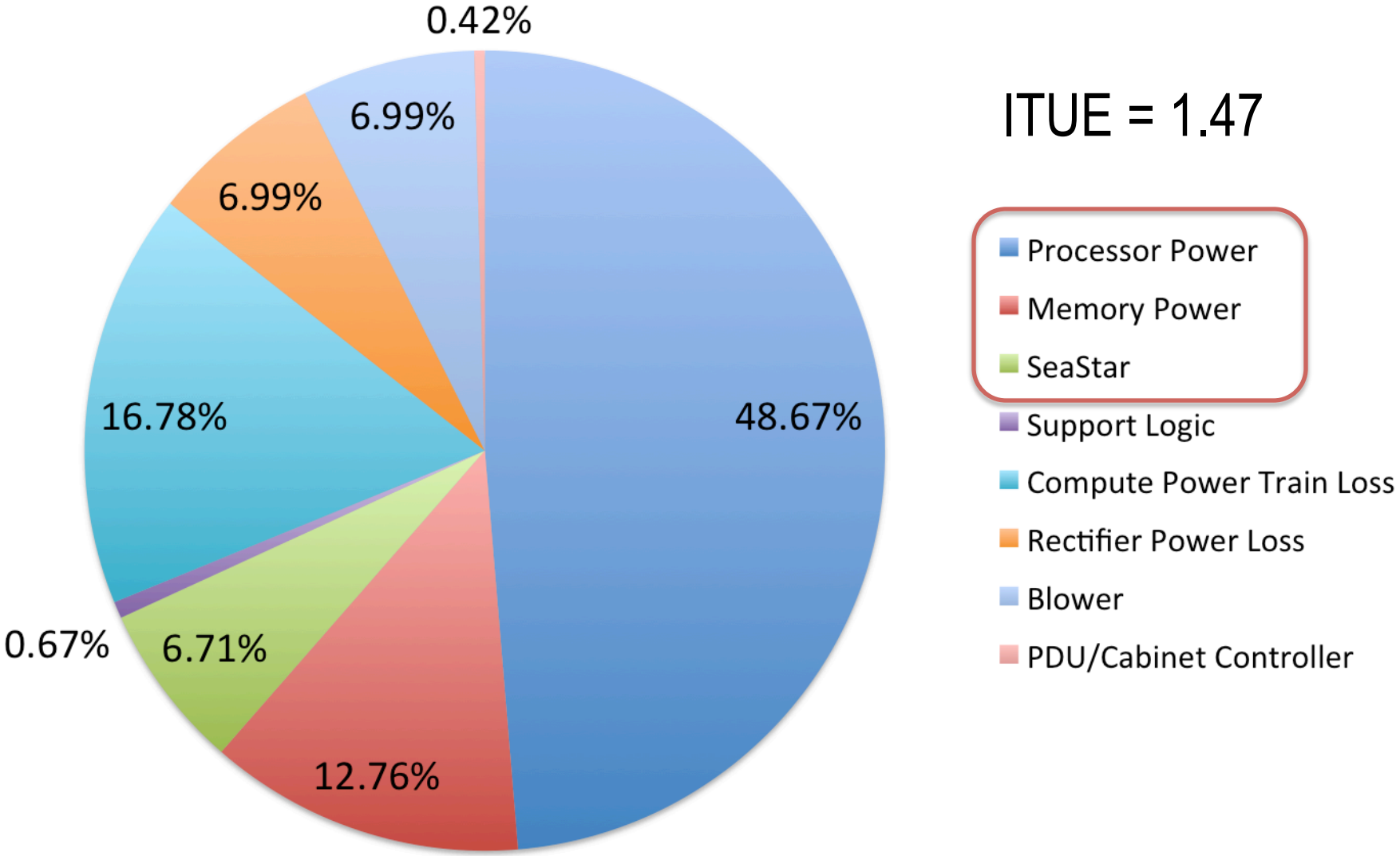

[Rogers, CUG'09]

Approach 3

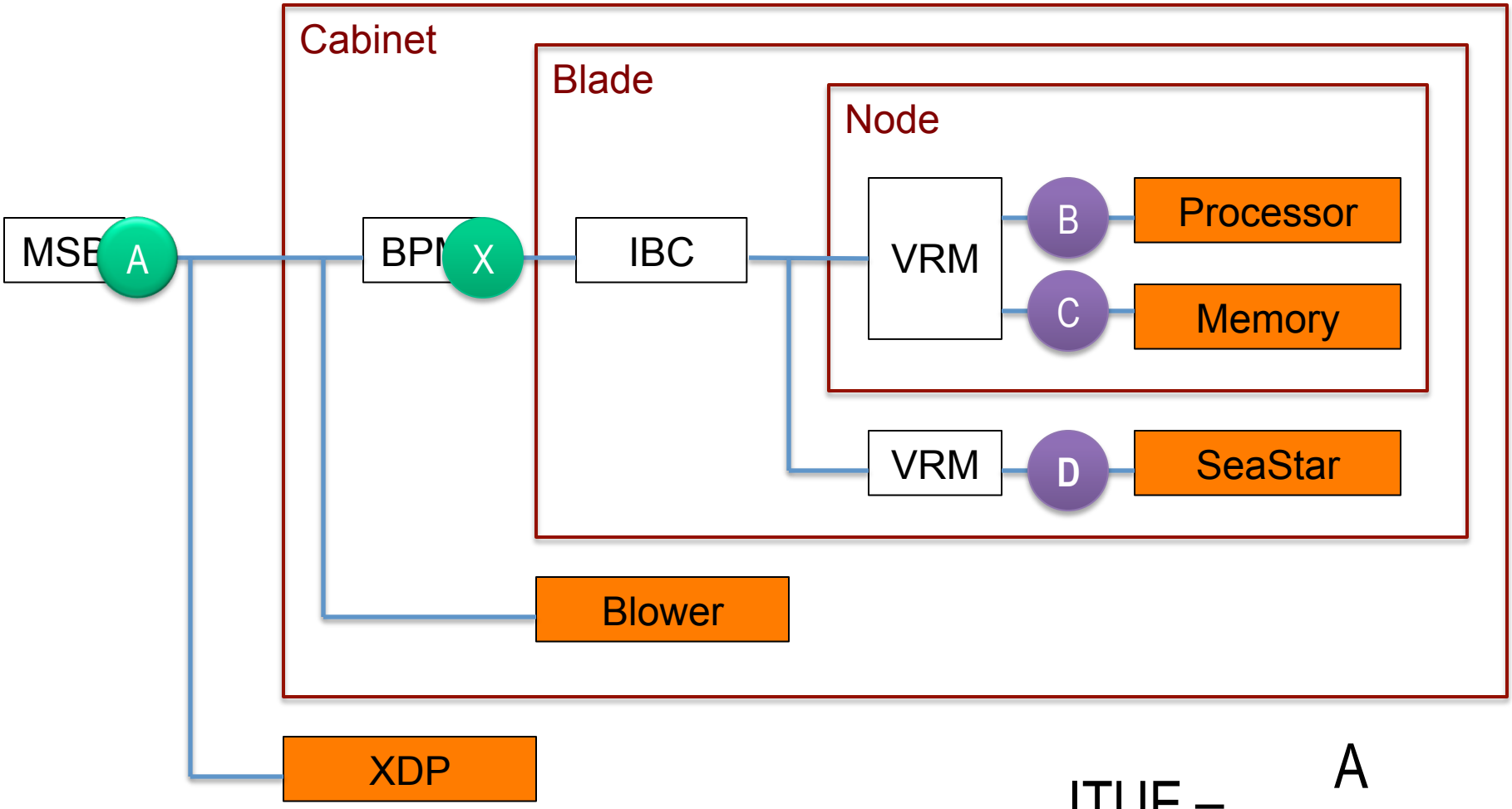

$$ITUE = \frac{A}{B + C + D}$$

Information courtesy of Rob Rongstad, Cray Inc.

Approach 3

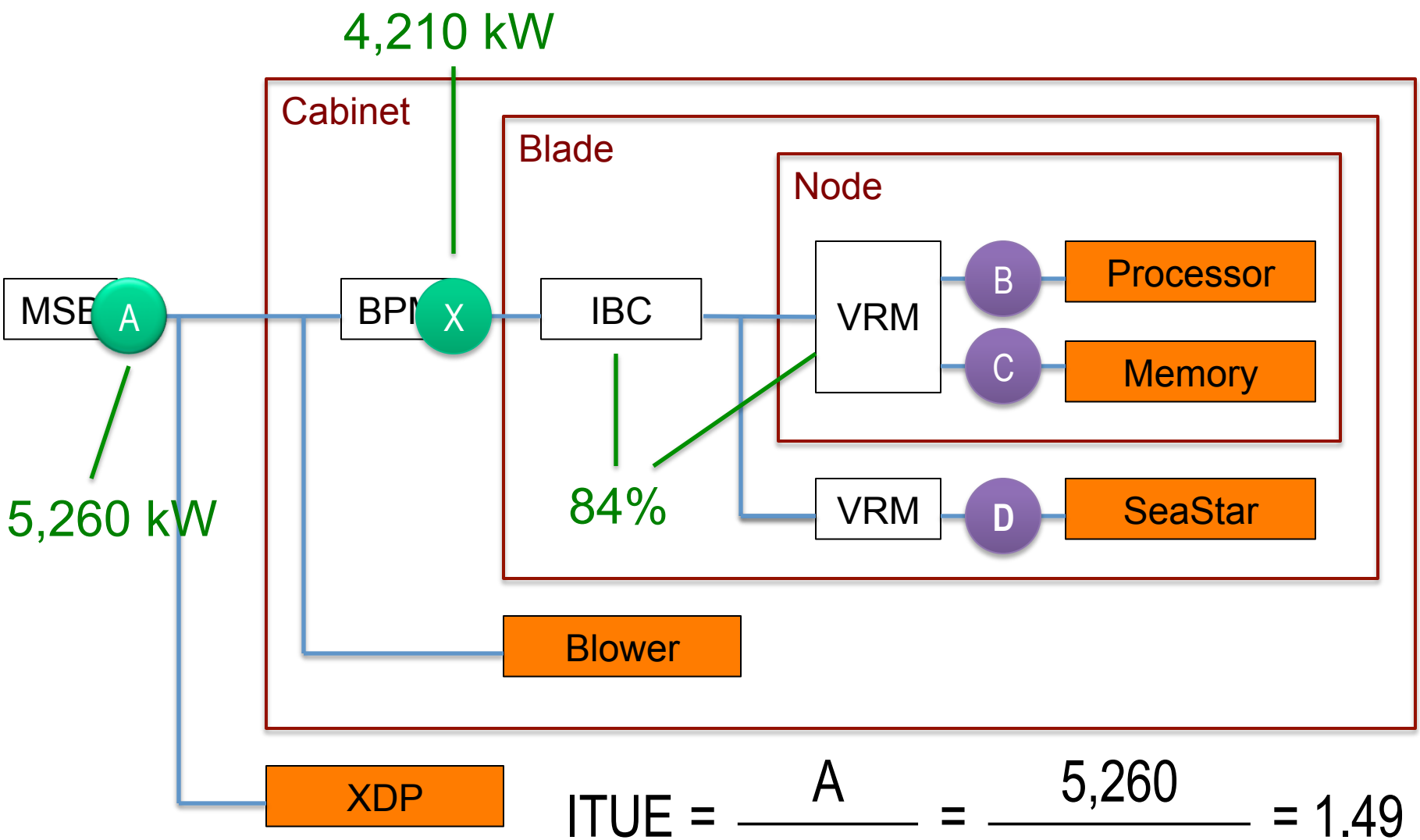

$$\text{ITUE} = \frac{A}{X * 84\%} = \frac{5{,}260}{4{,}210 * 84\%} = 1.49$$

Information courtesy of Don Maxwell, Darren Norris, ORNL

Comments

- It's easier to calculate (or estimate) ITUE today.
- Newer systems have ITUE around 1.3.
- Still lacking of desired measuring capabilities.
- In the future, collecting data during "official" HPL run?
- The quality of measurements: which "watts"?

Acknowledgements

Thank You!

This work was supported by ORNL's Extreme Scale Systems Center funded by the United States Department of Defense and used resources of Oak Ridge Leadership Computing Facility.