# TUE, a new energy-efficiency metric applied at ORNL's Jaguar

Michael K Patterson, PhD, PE, DCEP

Principal Engineer, Exascale Systems Architecture and Pathfinding

June 18, 2013

# The team: Co-Authors


Stephen W Poole
Chung-Hsing Hsu
Don Maxwell

Oak Ridge National Laboratory

William F Tschudi
Henry Coles

Berkeley Lab
Lawrence Berkeley National Laboratory

David J Martinez

Sandia National Laboratories

Natalie J Bates

EE HPC WG

# Motivation

- HPC Cluster and Data Center energy use is a challenge; possibly constraining Industry growth
- We can’t manage what we don’t measure
- Metrics allow tracking and trending of our performance and comparison to others
- PUE has helped but has limitations, what is the next step towards better energy efficiency?

# Overview

- PUE Definition and Development
- Issues with PUE
- Defining new metrics
  - ITUE: IT-power usage effectiveness
  - TUE: total-power usage effectiveness
- Metrics demonstration and example
- Case Study at Jaguar
- Next Steps and Future Work

# Methodology

- The work has been done under the umbrella of the EE HPC WG
  - EE HPC WG is an all-volunteer (350+ members) collaborative effort covering a range of Energy Efficient topics in HPC, see: http://eehpcwg.lbl.gov
- Metrics Team regularly discussed how to deal with efficiency of large HPC systems; particularly with cooling equipment as part of the IT
  - Breaks the typical PUE model
- Concept of a “server PUE” presented to the Team
- ITUE and TUE metrics developed by the EE HPC WG Metrics team
- Intel platform power model results made available to the WG to develop a design-base result for TUE and ITUE
- EE HPC WG sought a member’s support for field application of the new metrics; ORNL volunteered
- All of the above was combined to write the ISC paper

# PUE

$$PUE = \frac{Total\ Data\ Center\ Annual\ Energy}{Total\ IT\ Annual\ Energy}$$

- Introduced in 2006 by Malone and Belady
- Developed and agreed to by EU Code of Conduct, DOE, EPA, Green Grid, ASHRAE, etc…
- Has led Energy Efficiency drive in Data Centers
  - PUE Average in 2007 ~ 2.5
  - Best in Class 2013:

NREL= 1.06, LRZ= 1.15, NCAR~1.2,

ORNL= 1.25, TU Dresden < 1.3

# PUE Definition

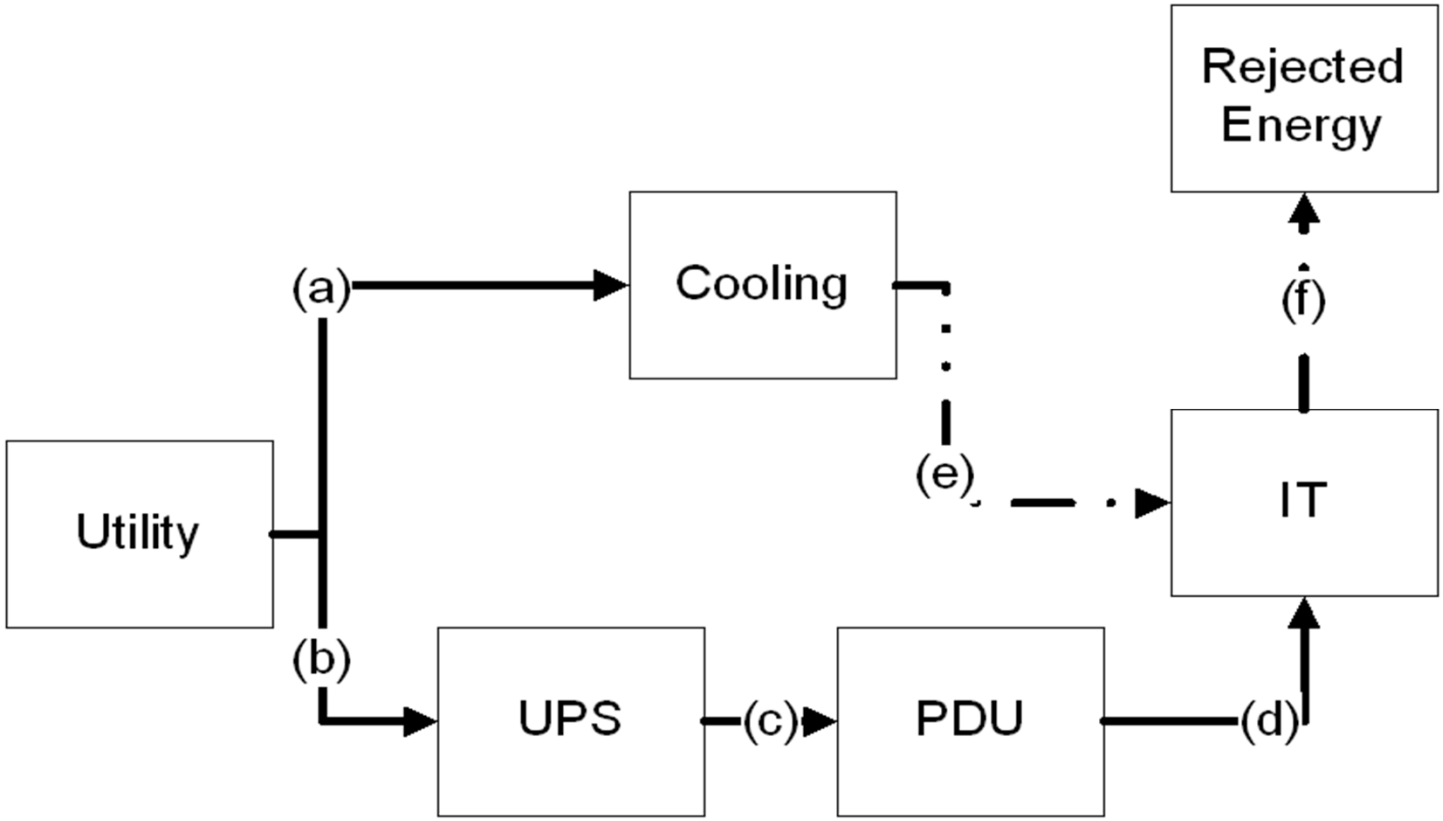


$$PUE = \frac{Total\ Energy}{IT\ Energy} = \frac{Cooling + PowerDistribution + Misc + IT}{IT} = \frac{a+b}{d}$$

# but PUE isn't perfect, consider…..

$$PUE = \frac{pwr + fan_{DC} + (IT + fan_{IT})}{(IT + fan_{IT})}$$

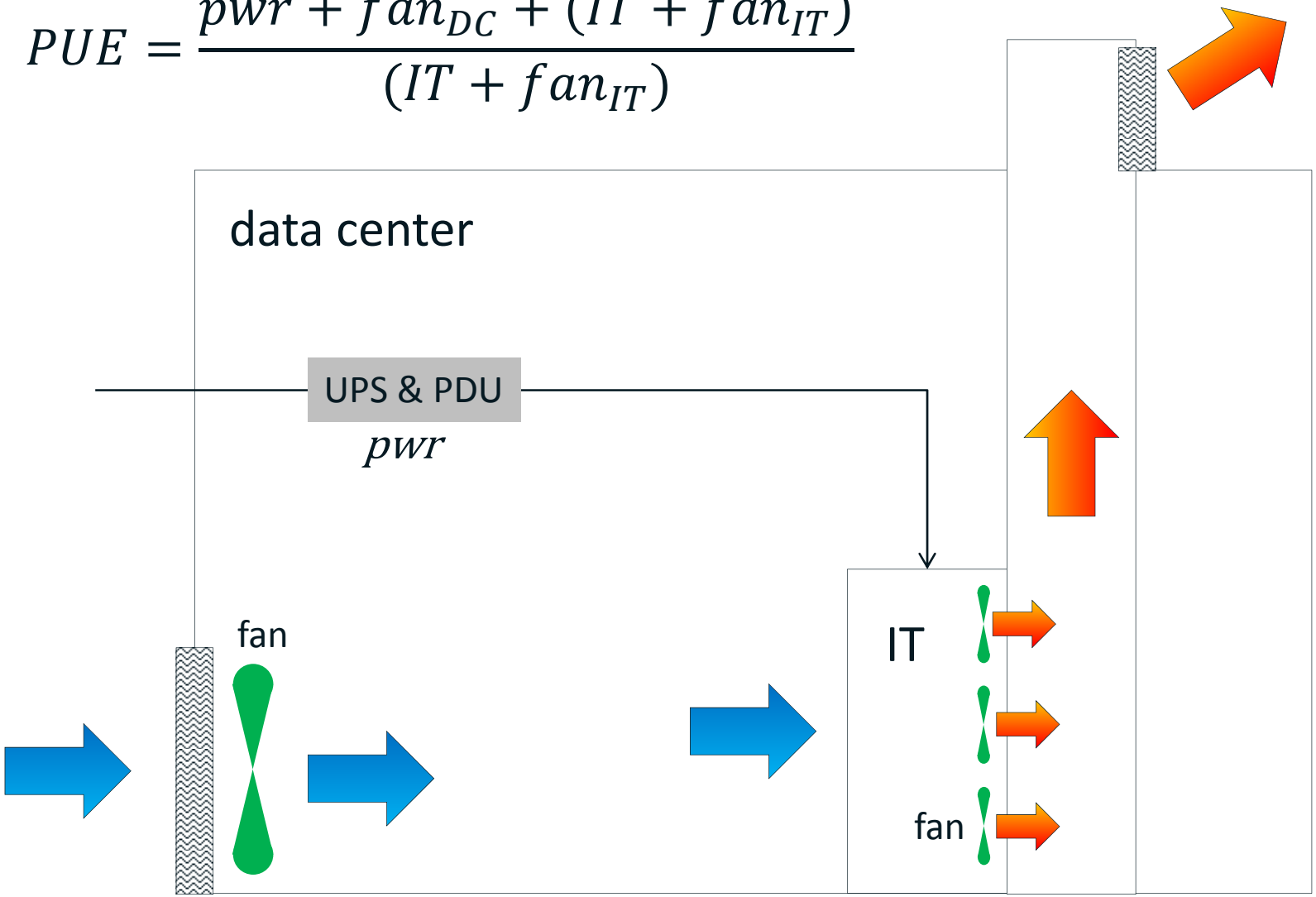

# Three variations…

a) both fans

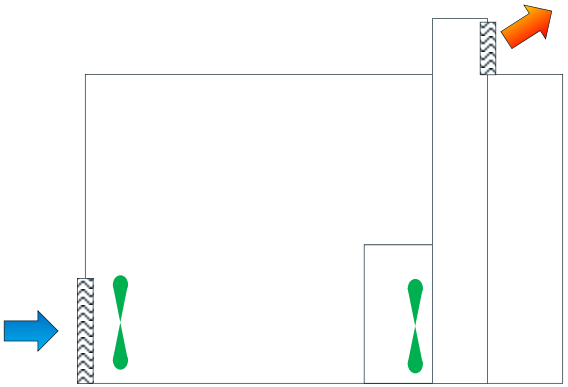

$$PUE_a = \frac{pwr + fan_{DC} + (IT + fan_{IT})}{(IT + fan_{IT})}$$

b) IT fans only

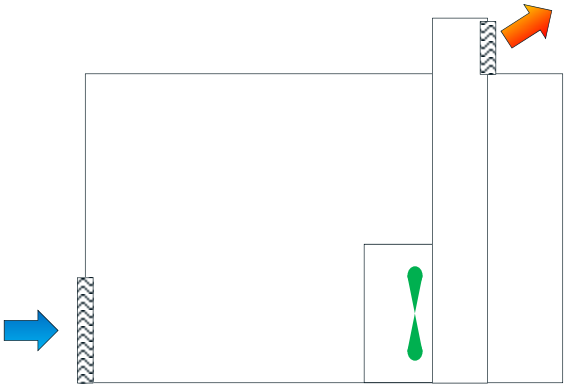

$$PUE_b = \frac{pwr + (IT + fan_{IT})}{(IT + fan_{IT})}$$

c) bldg fan only

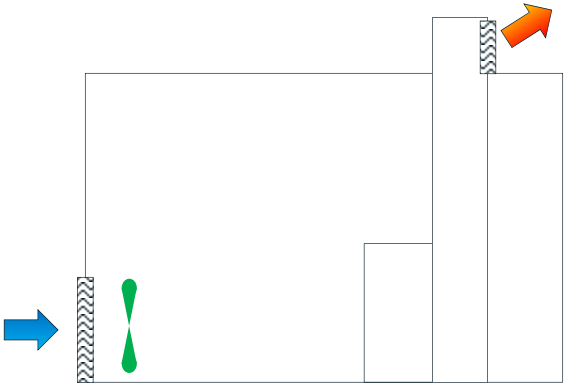

$$PUE_c = \frac{pwr + fan_{DC} + IT}{IT}$$

$PUE_b < PUE_a < PUE_c$ but is (b) best?
We don't know….

# Can we define a “server-PUE”? Maybe ITUE?

$$PUE = \frac{Total\ Energy}{IT\ Energy} = \frac{Pwr + Cooling + Misc + IT}{IT} = \frac{Infrastructure\ \ Burden + IT}{IT}$$

| | Data Center | Server |
|---|---|---|
| Power dist losses | UPS, line losses, PDUs | PSU, VRs, board losses |
| Cooling losses | Chiller, CRAC, Pumps, Fans | Fans, Pumps |
| Misc losses | Security, Lighting, Building Control | Indicators, Platform Control |
| IT | Servers, Storage, Network | Processor, Memory, Disk |

$$ITUE = \frac{Infrastructure\ \ Burden + Compute}{Compute} = \frac{Pwr + Cooling + Misc + Compute}{Compute}$$

$$ITUE = \frac{Total\ Energy\ into\ the\ IT\ Equipment}{Total\ Energy\ into\ the\ Compute\ Components}$$

# ITUE

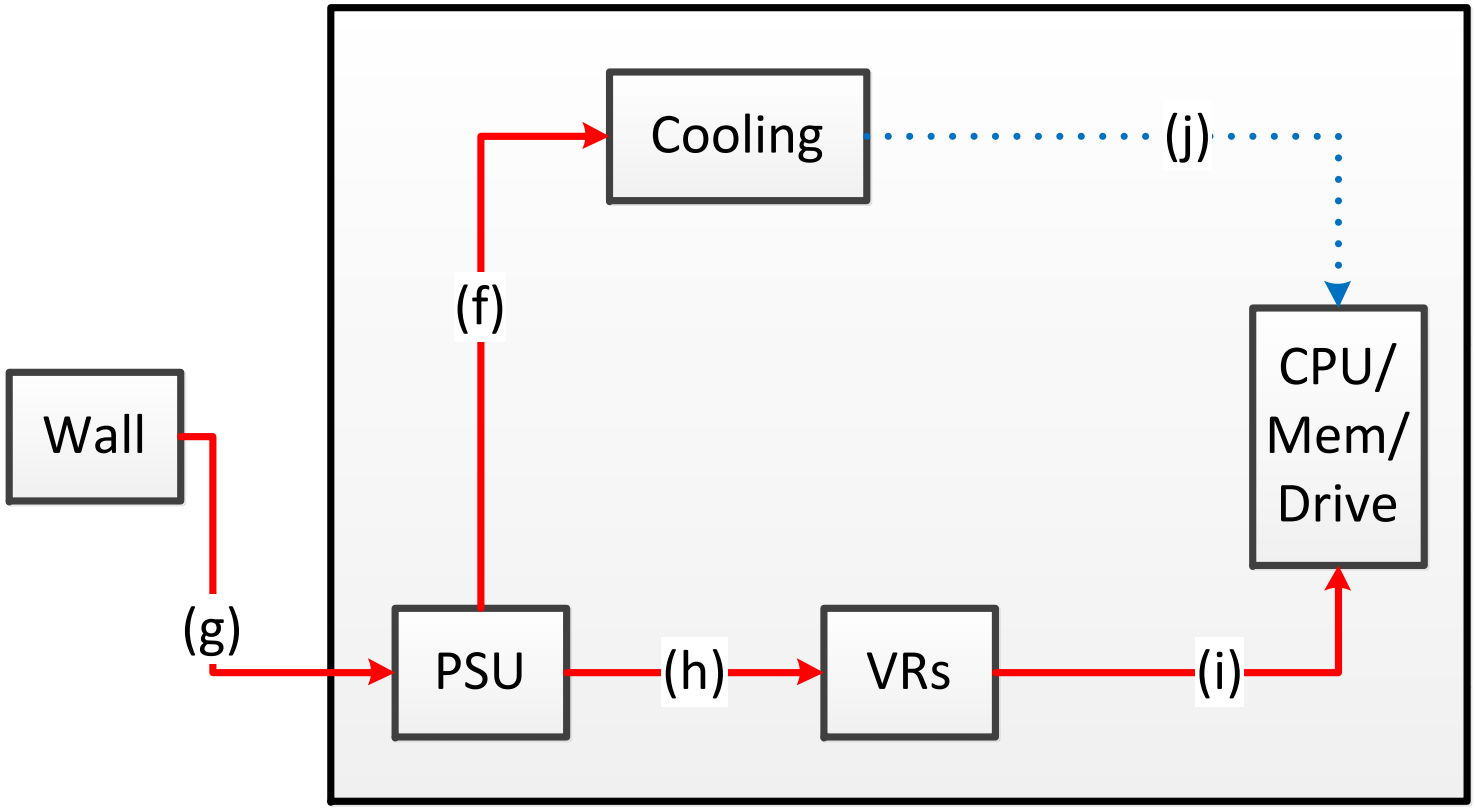


$$ITUE = \frac{total\ energy\ into\ the\ IT\ equipment}{total\ energy\ into\ the\ compute\ components} = \frac{i}{g}$$

# The next step…

PUE and ITUE are both:

- dimensionless ratios
- Represent the burden or “tax” of infrastructure
- “1” is ideal, values larger than 1 are worse
- Values less than 1 are not allowed

- So why not:

$$TUE = PUE \; x \; ITUE$$

# TUE

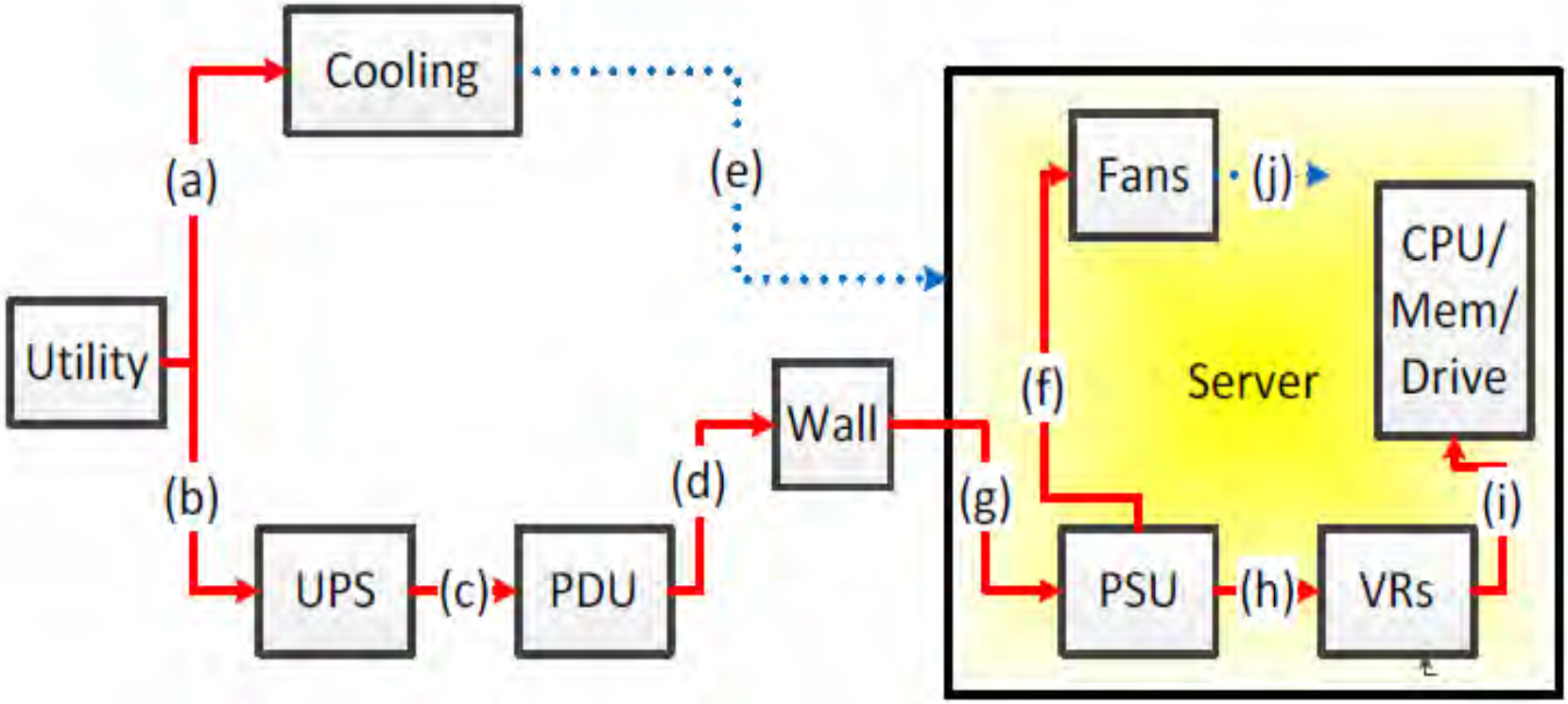


$$PUE = \frac{Total\ Energy}{IT\ Energy} = \frac{a+b}{d}$$

$$ITUE = \frac{Total\ Energy}{Compute\ Energy} = \frac{g}{i}$$

$$TUE = ITUE \times PUE = \frac{a+b}{i}$$

# Does it work?

a) both fans

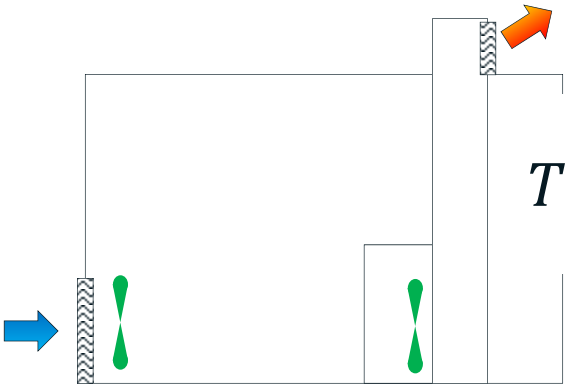

$$TUE_a = \frac{pwr + fan_{DC} + fan_{IT} + compute}{compute}$$

b) IT fans only

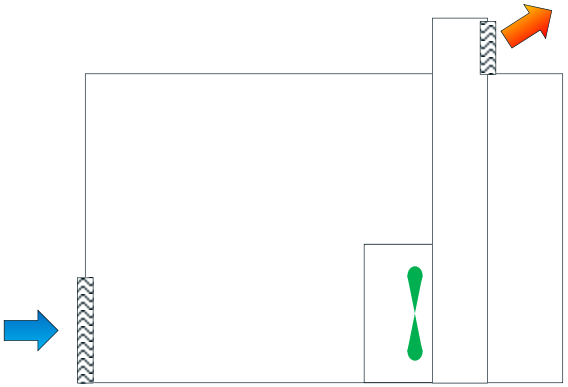

$$TUE_b = \frac{pwr + fan_{IT} + compute}{compute}$$

c) bldg fan only

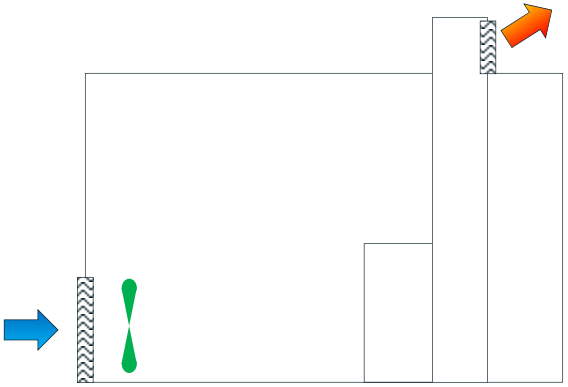

$$TUE_c = \frac{pwr + fan_{DC} + compute}{compute}$$

The lowest TUE yields the lowest energy use. *Yes, it works!*

# Demonstration of the Metrics

- Two Data Centers (a) & (b), identical infrastructure, each w/ PUE = 1.6
- Major refresh, Installing 10,000 new servers
- $DC_a$ getting economy servers, $DC_b$ w/ high efficiency models

| | a) Economy (W) | b) High Eff (W) |
|---|---|---|
| Proc, Mem, Stor | 198 | 198 |
| PSU | 58 | 18 |
| VRs | 56 | 38 |
| Fans | 18 | 12 |
| Total Platform | 330 | 266 |

**After the refresh, $DC_b$ will have a worse PUE**

# Example Data Center ITUE

$$ITUE = \frac{\text{Fan} + \text{PSU} + \text{VRs} + \text{Compute}}{\text{Compute}}$$

With “economy” hardware:

$$ITUE_a = \frac{18 + 58 + 56 + 198}{198} = 1.67$$

With “high efficiency” hardware:

$$ITUE_b = \frac{12 + 18 + 38 + 198}{198} = 1.34$$

**UE appropriately reflects the more efficient hardwar**

# Summary of the Metrics

| | a) Economy | b) High Eff |
|---|---|---|
| Total Platform | 3.31 MW | 2.67 MW |
| Infrastructure | 1.99 MW | 1.99 MW |
| Total Site Power | 5.3 MW | 4.66 MW |
| PUE | 1.6 | 1.74 |
| ITUE | 1.67 | 1.34 |
| TUE | 2.67 | 2.33 |

**The combination of the three metrics paints the whole picture**

# Jaguar – TUE Case Study

**200 Cray XT5 Cabinets (25x8)**

48 Liebert XDP Cooling Systems

37kW/cabinet – 7.5MW Total

184 ECOPhlex-cooled Cabinets

16 Air-cooled Cabinets

4500 square feet (system min. only)

Source: J. Rogers, CUG 2009.

# Power Monitoring in Jaguar

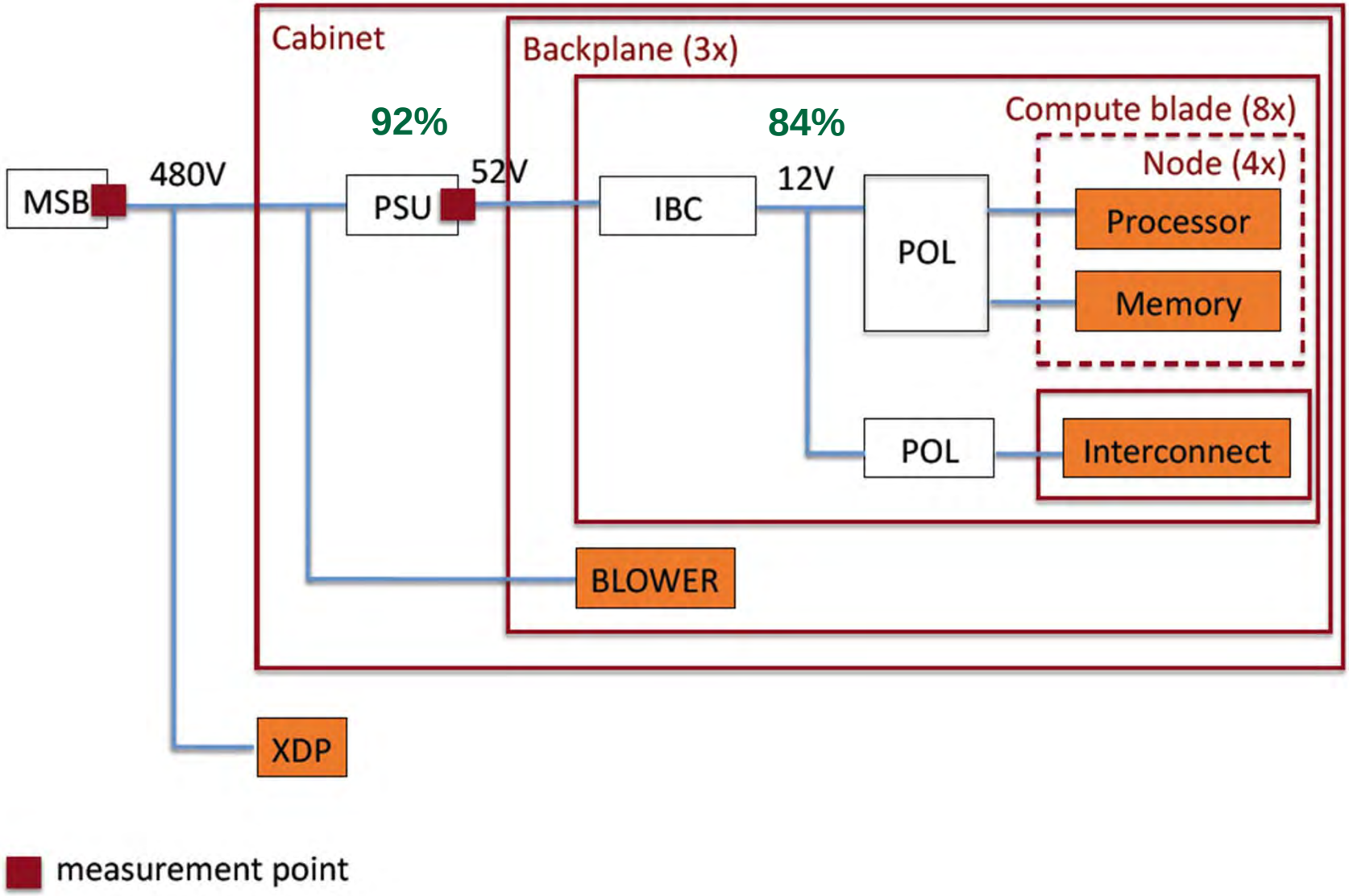

# The ITUE of Jaguar for 2011-01

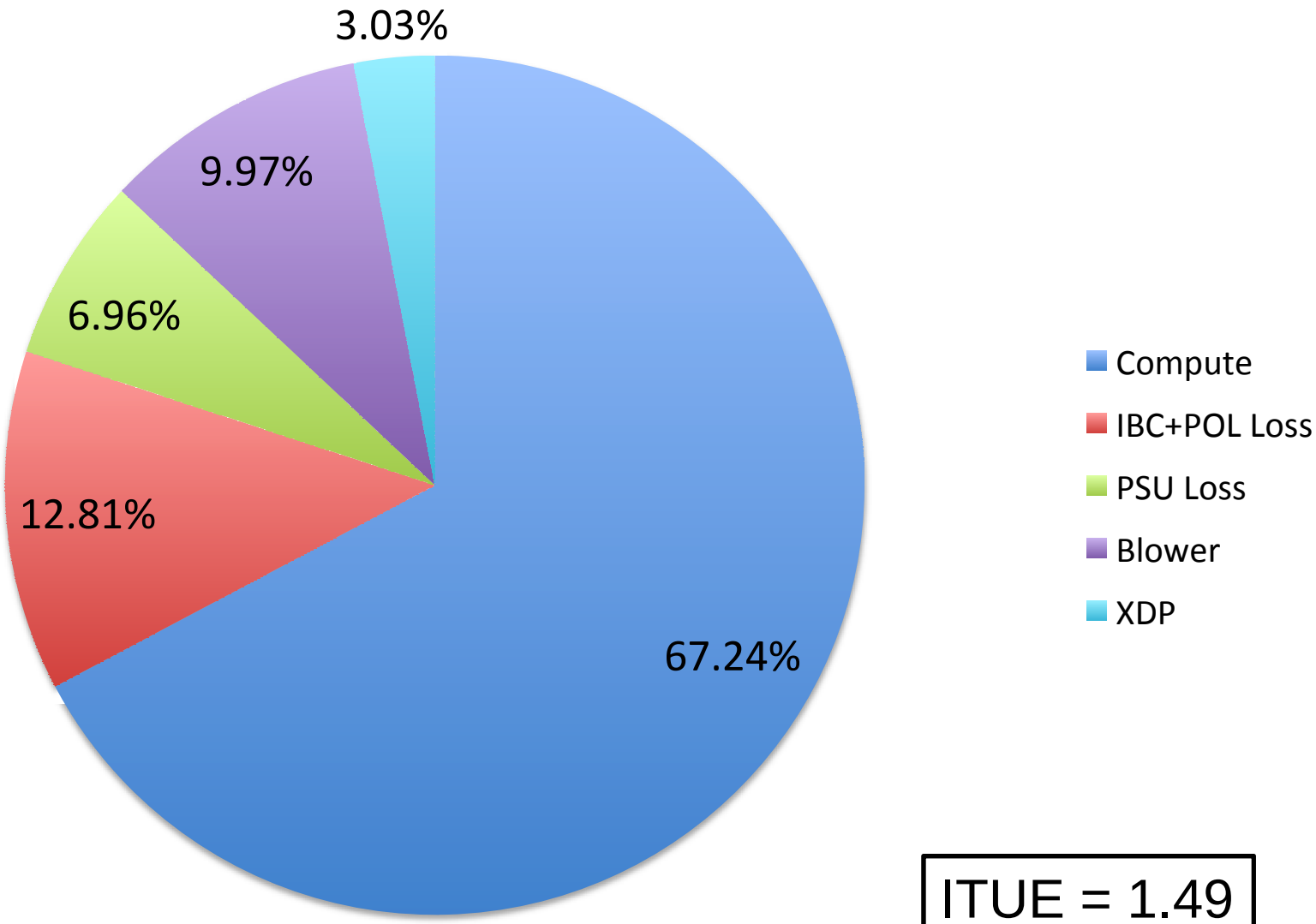


ITUE = 1.49

# The ITUE of Jaguar for 2011 Q1-3

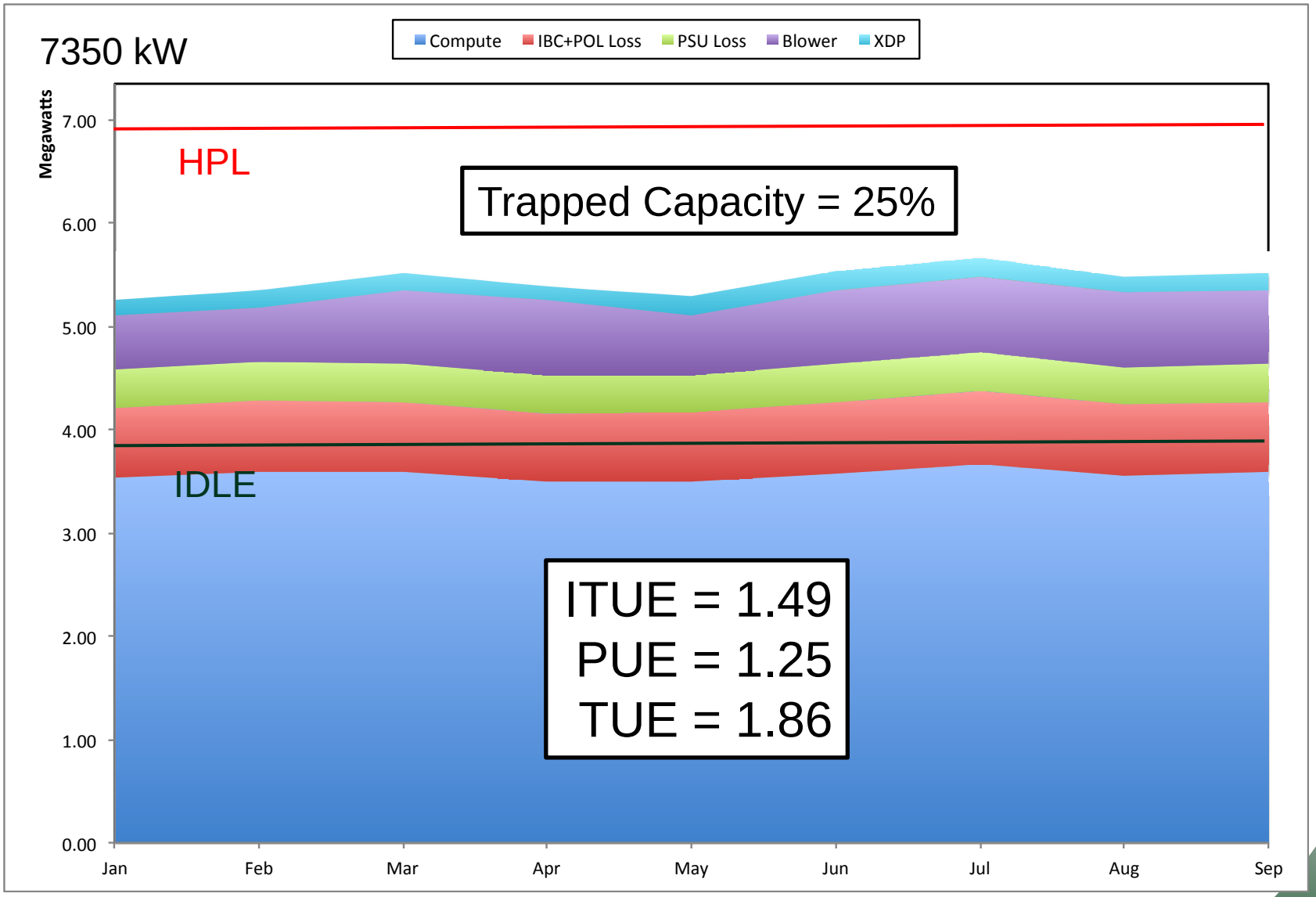

# Next Steps and Future Work

- Collect, trend, and share more and future ITUE and TUE data
- Over time TUE and ITUE can create the same pull and success that PUE has
- HPC an ideal segment to develop the concepts
  - Sophisticated user base
  - Importance of power and energy
  - More homogenous machine deployment
  - More likely to use non-COTS hardware; with different power and cooling architecture
- End users are encouraged to ask for the right cluster level instrumentation to measure ITUE

**Acknowledgments:**

**Development of and testing of the TUE metric was performed by members of the Energy Efficiency High Performance Working Group, a voluntary organization facilitated by Lawrence Berkeley National Laboratory through support by the Department of Energy's Sustainability Performance Office (DOE SPO).**

**This work was supported by the United States Department of Defense and used resources of the Extreme Scale Systems Center at Oak Ridge National Laboratory. Portions of the work were performed at the Oak Ridge National Laboratory, which is managed by UT-Battelle, LLC under Contract No. De-AC05-00OR22725.**

# Thank You.  Questions?

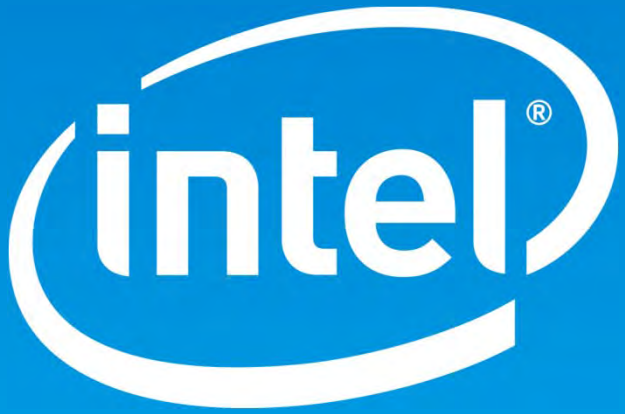
intel®