PUE in the Past; Towards TUE in the Future

Henry Coles
Lawrence Berkeley National Laboratory
Environmental Energy Technologies Division (EETD)
High Technology and Industrial Systems Group

BrightTalk: March 19, 2014

Outline

PUE

- Background
- Components
- PUE Definition and Visualized
- Examples, Base Case
- pPUE (partial PUE)
- PUE Not Perfect

ITUE & TUE

- Introduction/Concept/Definition
- Example: How Does TUE Work?
- Does TUE Address PUE's Weaknesses?

- Conclusions

PUE Background

Power Usage Effectiveness (PUE) introduced in a paper by Chris Malone and Christian Belady 2006 [1]

PUE for a dedicated building is the total facility energy divided by the IT equipment energy. PUE is an end-user metric used to help improve energy efficiency in data center operations [2].

PUE is a simple metric used to measure energy use efficiency for data centers.

Base Definition

$$PUE^* = \frac{\text{Total Facility Energy}}{\text{IT Equipment Energy}}$$

[1] Belady, Christian, Chris Malone, 2006, *Efficiency Metric Called PUE*, Digital Power Forum

[2] From: PUE™: A COMPREHENSIVE EXAMINATION OF THE METRIC – 2012 The Green Grid: WP#49

PUE Components

Examples: Data Center Facility Power Consuming Equipment:

"Infrastructure"

- Uninterruptable Power Supply (UPS) inefficiency
- Switch gear
- Backup generators including block heating and fuel
- Power line distribution
- Data center lighting
- Office space electrical loads if dedicated to data center support
- Chillers
- Cooling tower fan and pumping
- Computer room air conditioners (CRACs) or CRAHs

"IT Equipment"

- IT Equipment (servers, tape drives, JBODs, networking)
- KVM switching devices
- Laptops or PCs used to monitor and control data center equipment

PUE Definition

$$PUE_{a,b} = \frac{\text{Total Facility Energy}}{\text{IT Equipment Energy}}$$

Data Point Collection Frequency

"Y" averaged over a year

"M" averaged over a month

"W" averaged over a week

Metering Placement

"L1" Basic (UPS output)

"L2" Intermediate (PDU output)

"L3" Advanced (at IT equip.)

From: PUE™: A COMPREHENSIVE EXAMINATION OF THE METRIC – the green grid: WP#49

PUE Visualized

$$PUE = \frac{\text{Total Data Center Annual Energy}}{\text{Total IT Annual Energy}}$$

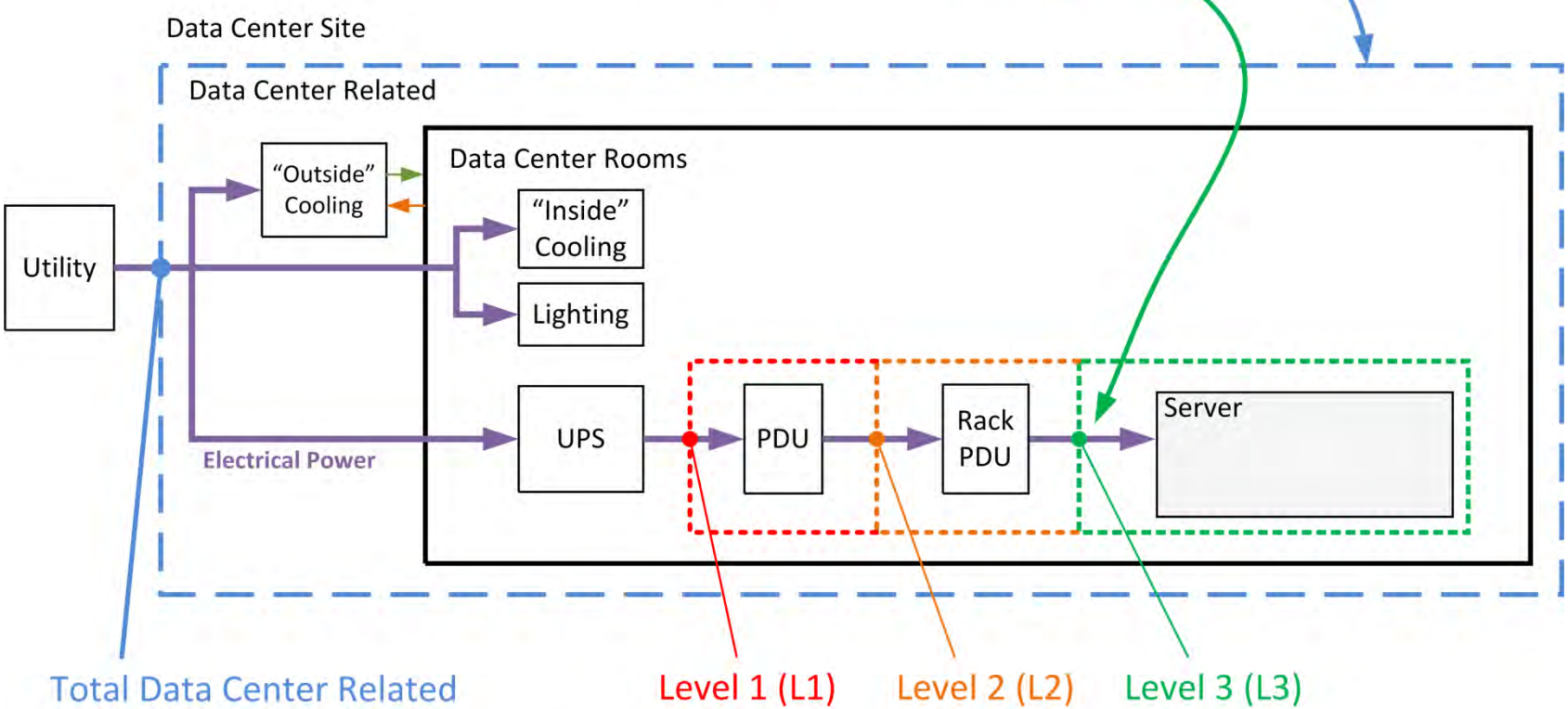

Electrical Energy/Power Measurement Points

PUE Example

For those that like pie charts.

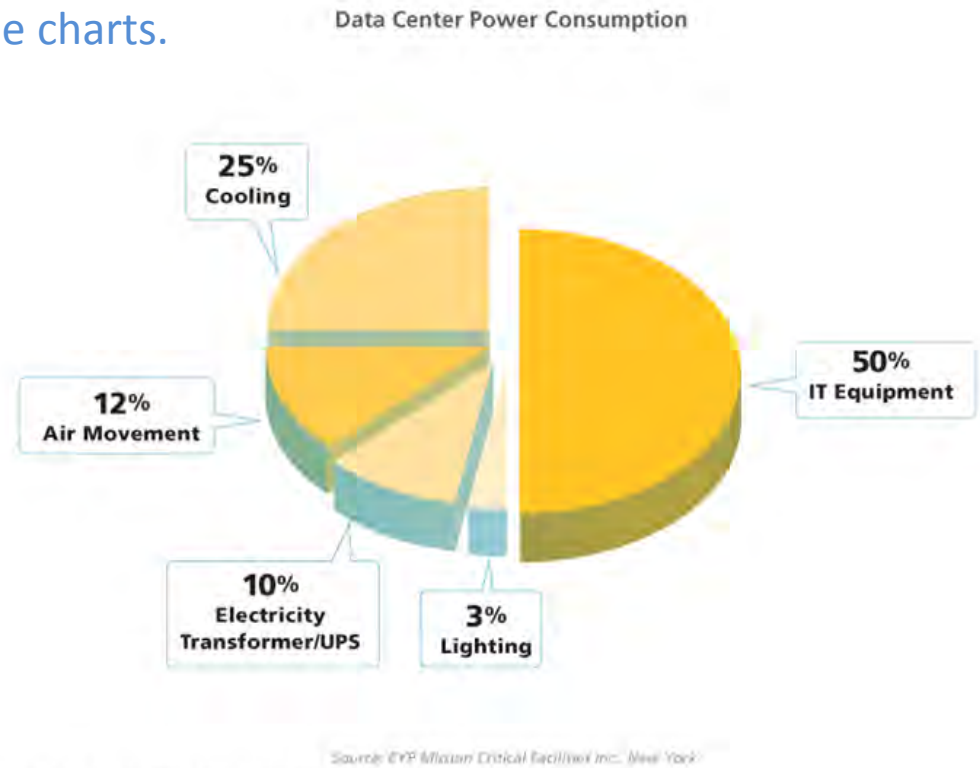

Souce: EYP Mission Critical Facilities Inc. , New York

$$PUE = (25 + 12 + 10 + 3 + 50) / 50 = 2.0$$

$$PUE = (100) / 50 = 2.0$$

Data Center Base Case

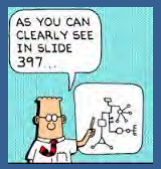

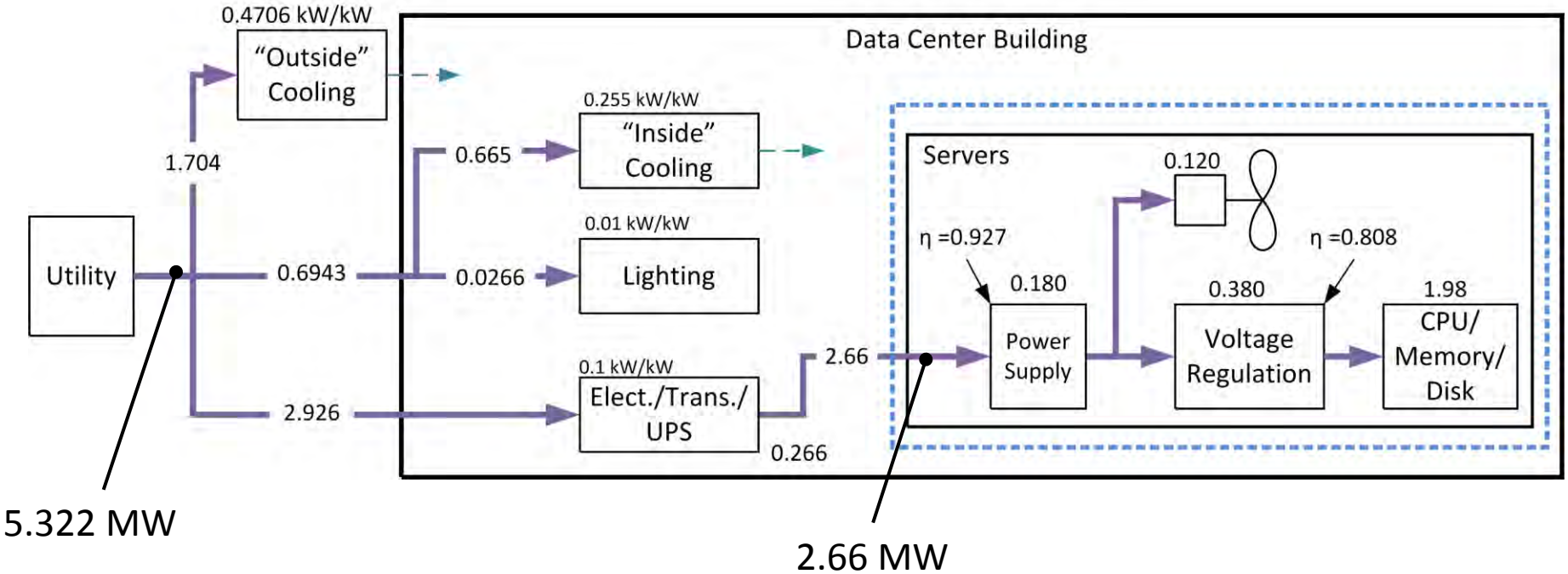

Base Case PUE = (1.704 + 0.665 + 0.0266 + 0.266 + 2.66) / 2.66 = 2.000

Base Case PUE = 5.322 / 2.66 = 2.000

Partial PUE (pPUE) Calculation

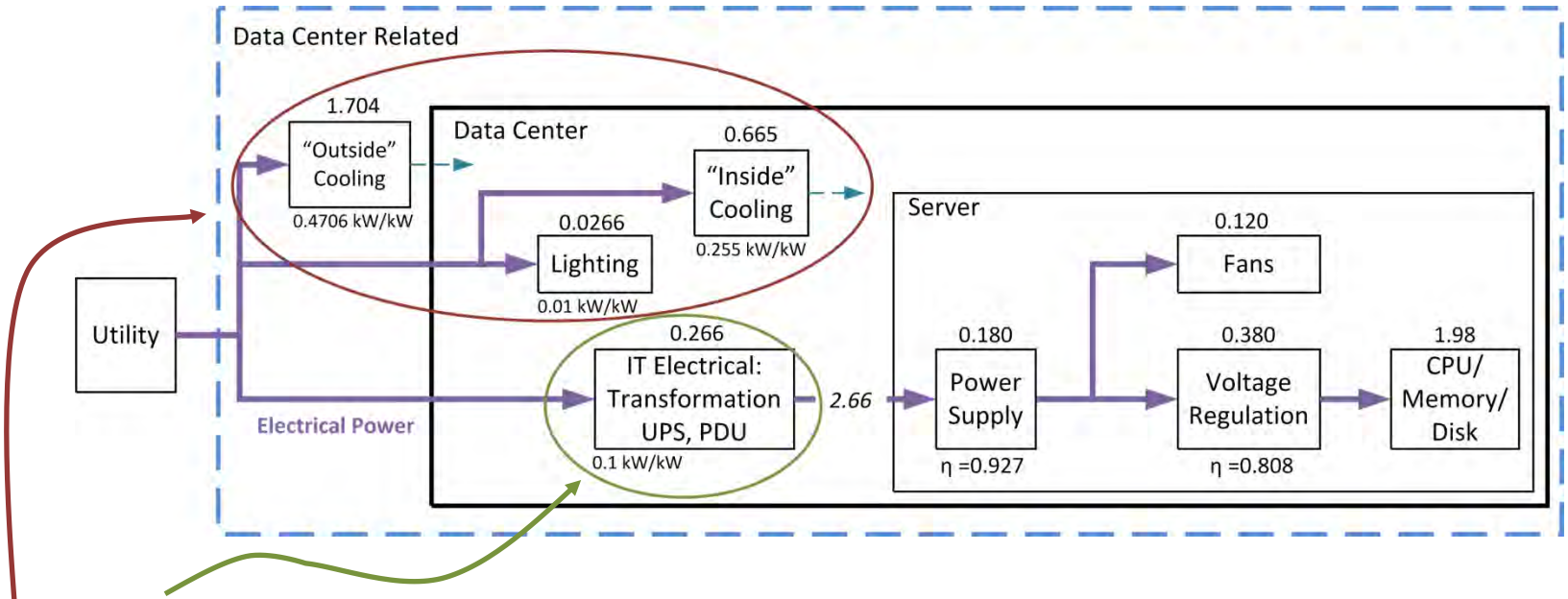

$pPUE_{\text{electrical IT}} = (0.266 + 2.66) / 2.66 = 1.100$

$pPUE_{\text{cooling and lighting}} = (1.704 + 0.665 + 0.0266 + 2.66) / 2.66 = 1.900$

$PUE_{\text{total}} = 1.100 + 1.900 - 1 = 2.000$

How Do We Think of PUE Values?

(Lower is Better?)

Is Lower Better?

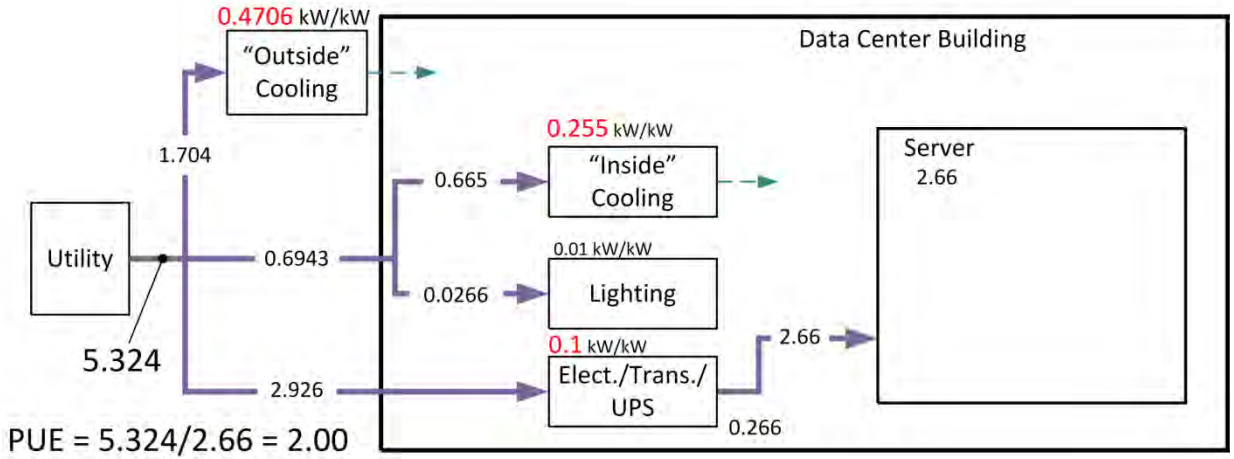

Yes, Lower is Better!

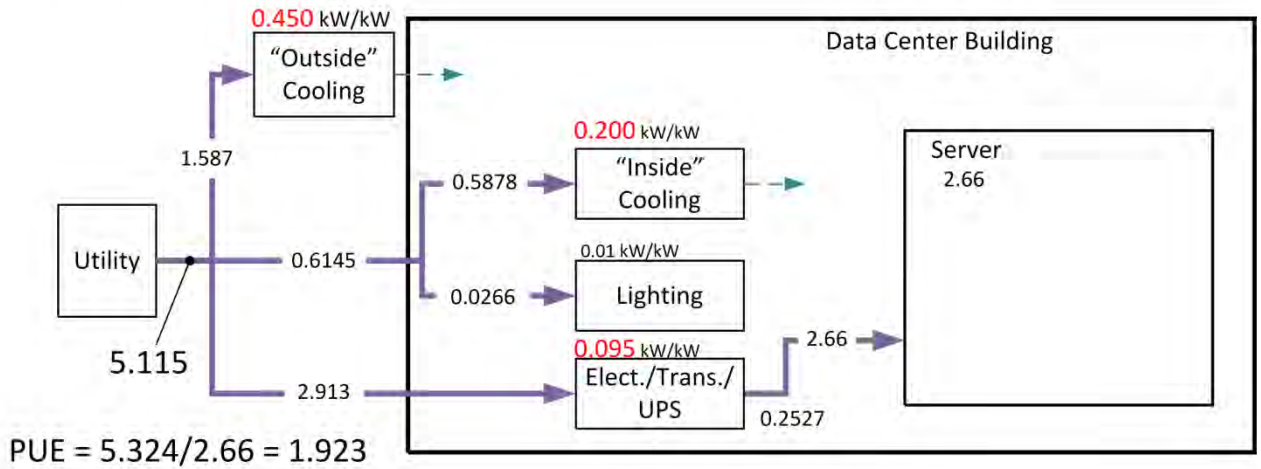

PUE Not Perfect: Move Fans Example

Data Center A

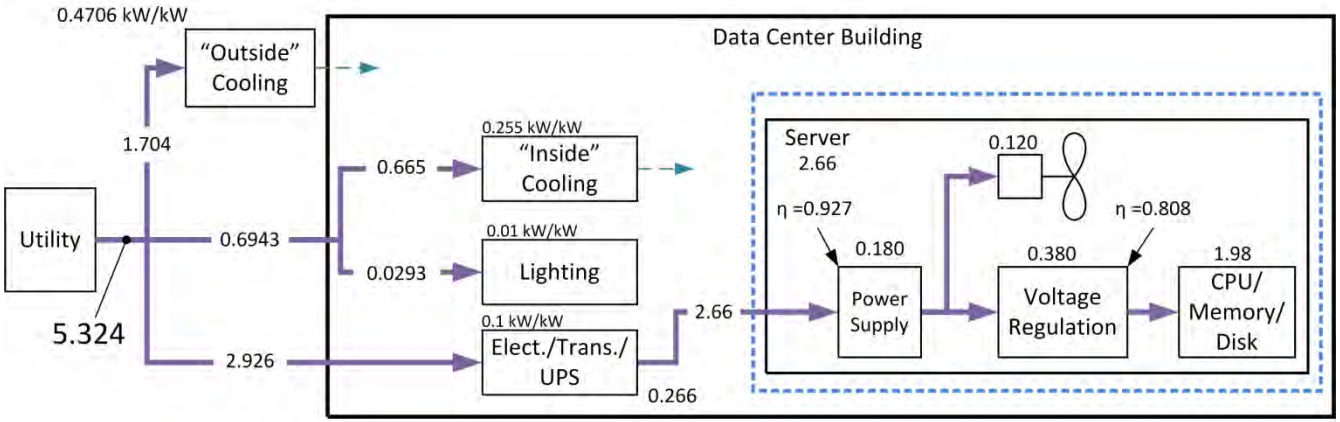

PUE = 5.324 / 2.66 = 2.00

compute ratio = 1.98/5.324 = 0.372 kW compute/kW data center power

Data Center B

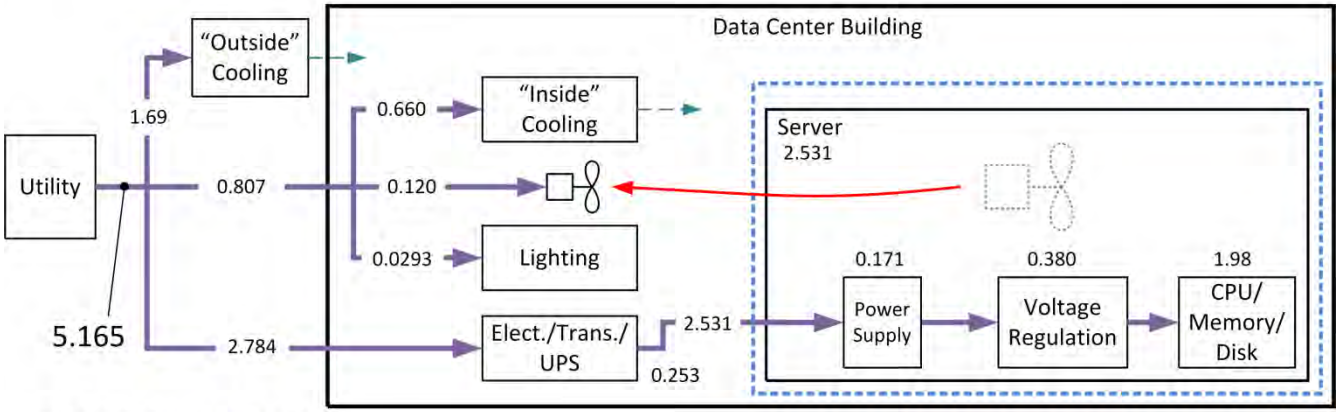

PUE = 5.165 / 2.531 = 2.04

compute ratio = 1.98/5.165 = 0.3833 kW compute/kW data center power

3% improvement in compute per data center power consumed

Data Center B uses less power BUT has a higher PUE

Is there an improved approach?

Introduce ITUE and TUE

Dr. Michael Patterson (Intel) and EEHPCWG Propose a New Metric
(Energy Efficient HPC Working Group)

ISC13 Gauss Award Winner – Most Outstanding Paper: TUE, a new energy-efficiency metric applied at ORNL's Jaguar

1 - Introduce *ITUE*: *ITUE* is a "PUE-type" metric for the IT equipment.

2 - Introduce *TUE* - a proposed new metric that uses *ITUE* and PUE.

TUE is a calculated value. *TUE* = *ITUE* x PUE

ITUE Definition

$$ITUE = \frac{\text{Total Energy into the IT Equipment}}{\text{Total Energy into the Compute Components}}$$

Hypothesis: TUE values are more accurate and consistent compared to PUE values.

Let's See If This is True.

ITUE Components

First : Review Components of ITUE

Like PUE, ITUE has Infrastructure and "productive" components.

"Infrastructure"

- Power Supplies
- Voltage Regulators
- Fans

Compute Equipment

- CPUs
- Memory
- Storage
- Networking

How Does TUE Work?

Simple TUE Example

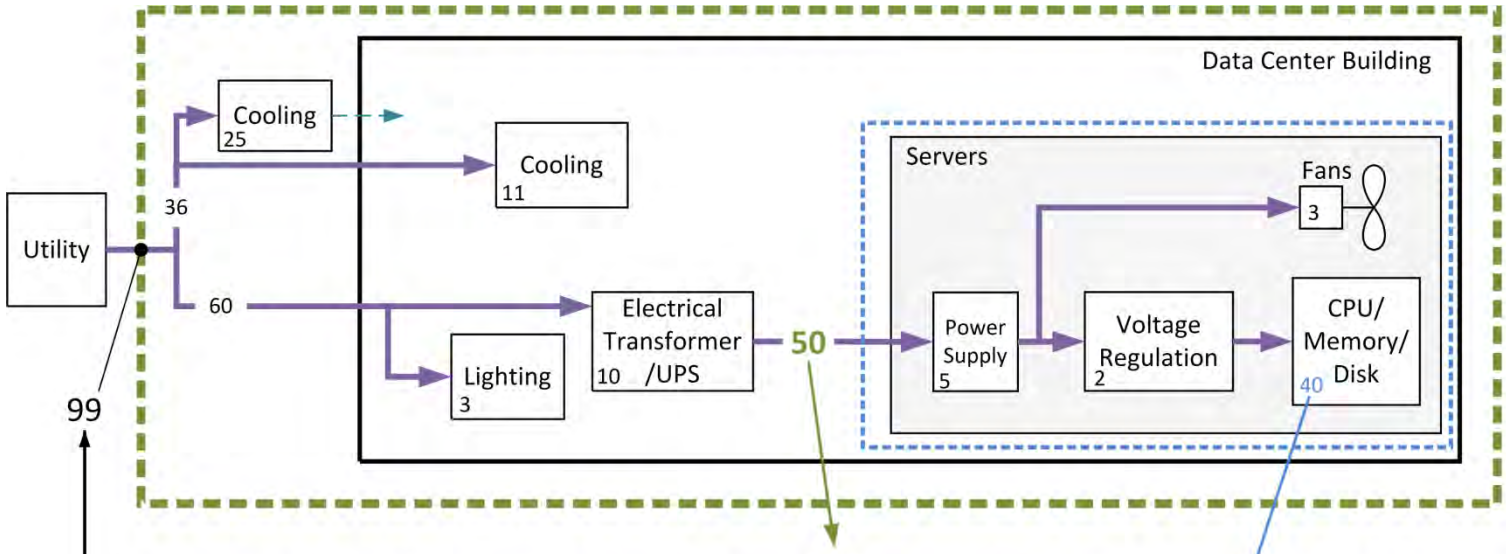

PUE = (25 + 11 + 3 + 10+ 50) / 50 = 1.98

Data Center = 1.98 * 50 = 99

ITUE = (5 + 2 +3 + 40) / 40 = 1.25

TUE = ITUE x PUE

TUE = 1.25 x 1.98 = 2.475

Data Center = 2.475 x 40 = 99

Same Data Center Value as PUE

Does TUE Provide The Correct Answer? – Server Fan Move Case

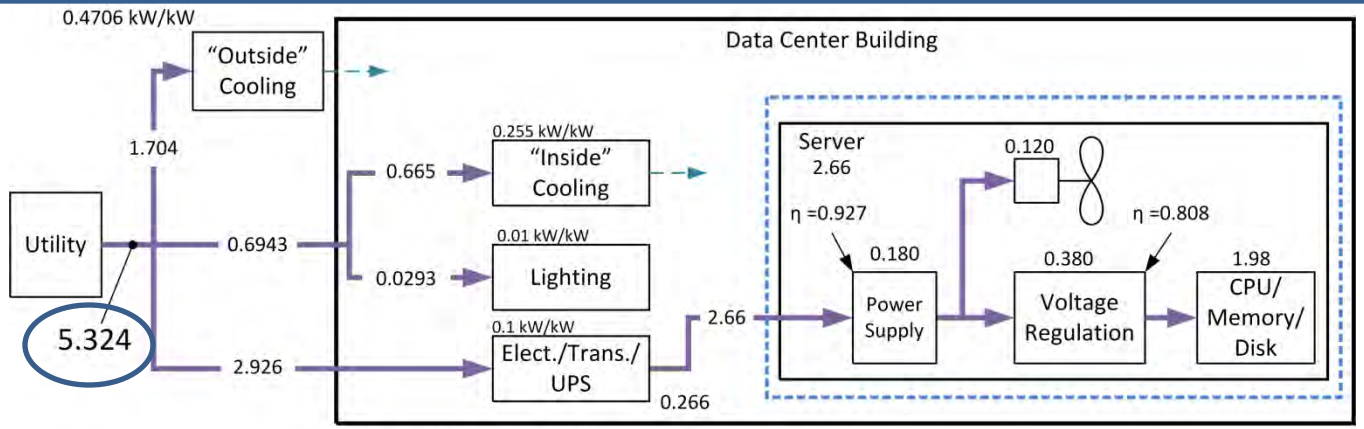

TUE= (2.00 * 1.343) = 2.68
DC Power = 1.98*2.68 = 5.32

PUE = 5.324 / 2.66 = 2.00

ITUE= (0.180+0.380+0.120+1.98)/1.98 = 1.343

Yes It Does!

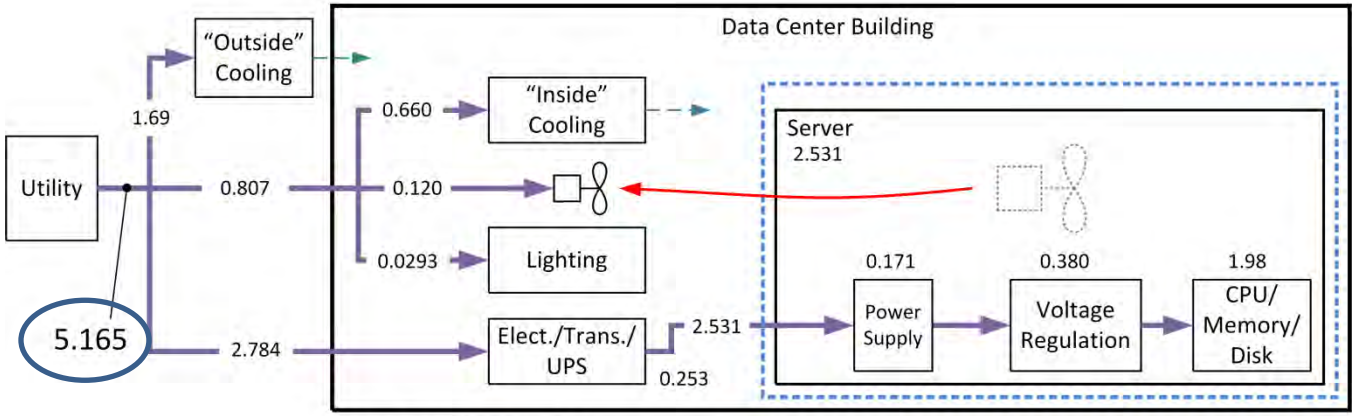

TUE= (2.04 * 1.278) = 2.61
DC Power = 1.98*2.61 = 5.16

PUE = 5.165 / 2.531 = 2.04

ITUE= (0.171+0.380+1.98)/1.98 = 1.278

Data Center B uses less power AND has a lower TUE

Conclusions

- PUE is a simple and effective data center energy use efficiency metric, much good has resulted from its use.
- The PUE metric is not perfect for some comparisons.
- A “server-PUE” (ITUE) is introduced and follows the PUE definition.
- ITUE and PUE combine to give TUE. This combination addresses some PUE weaknesses.
- ITUE requires IT equipment internal component information or assumptions

End

Questions?