Leibniz Supercomputing Centre

Liquid Cooling Commissioning Lessons Learned @LRZ

Detlef Labrenz (labrenz@lrz.de)

EE HPC WORKING GROUP, SC13, Denver, Nov. 17-22, 2013

Leibniz Supercomputing Centre

Munich	Bavaria	Germany & Europe

- **We provide generic IT services to all Munich universities**
- **We provide special IT services to all universities in Bavaria**
  - Network, High Performance and Grid Computing
  - Backup and Archive Services
  - IT Management
- **We provide supercomputing resources to scientists in Europe**
  - Member of the German Gauss Supercomputing Centre
  - Third party of the European HPC Infrastructure PRACE
  - PRACE Tier-0 Supercomputing Center (SuperMUC system)
  - Investigations on Future HPC Systems:
    - Hardware Architectures
    - Programming Models & System Software
    - Zero Emission Data Center Infrastructures
    - Re-Use of Waste Heat

Data Center Infrastucture

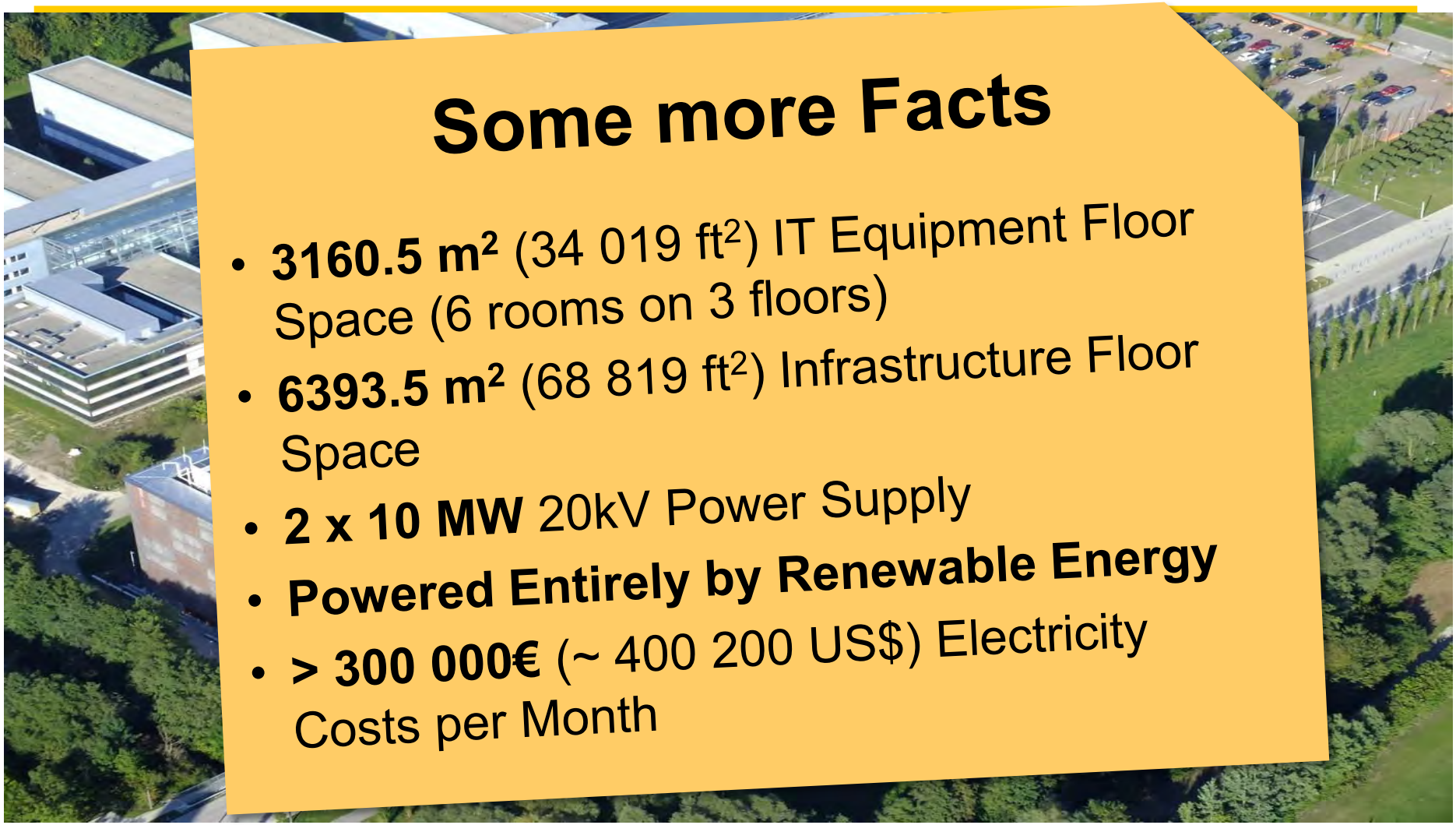

Some more Facts

- **3160.5 m²** (34 019 ft²) IT Equipment Floor Space (6 rooms on 3 floors)
- **6393.5 m²** (68 819 ft²) Infrastructure Floor Space
- **2 x 10 MW** 20kV Power Supply
- **Powered Entirely by Renewable Energy**
- **> 300 000€** (~ 400 200 US$) Electricity Costs per Month

Layout of Cooling Infrastructure

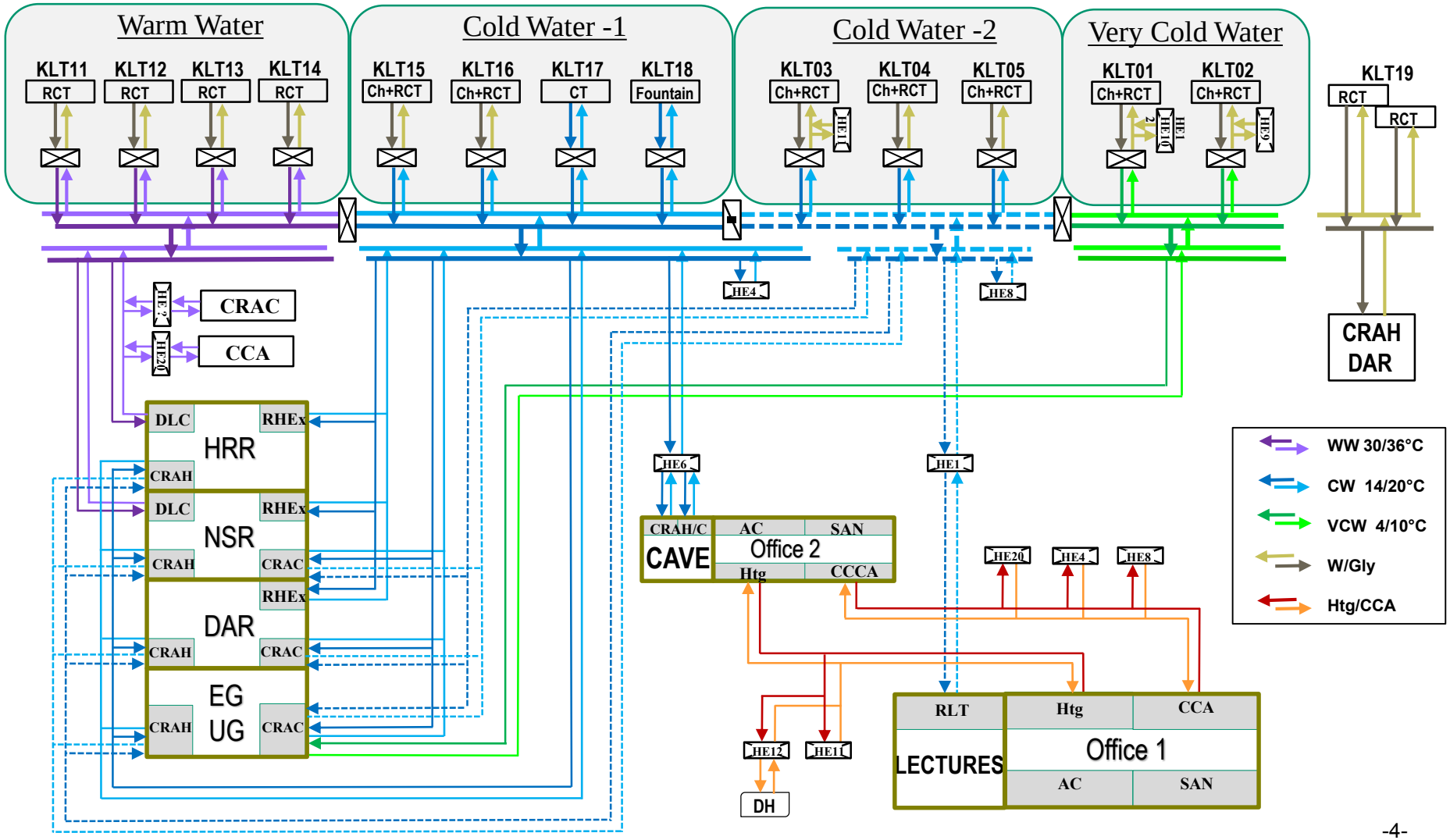

SuperMUC: IBM System x iDataPlex With Direct Water Cooling

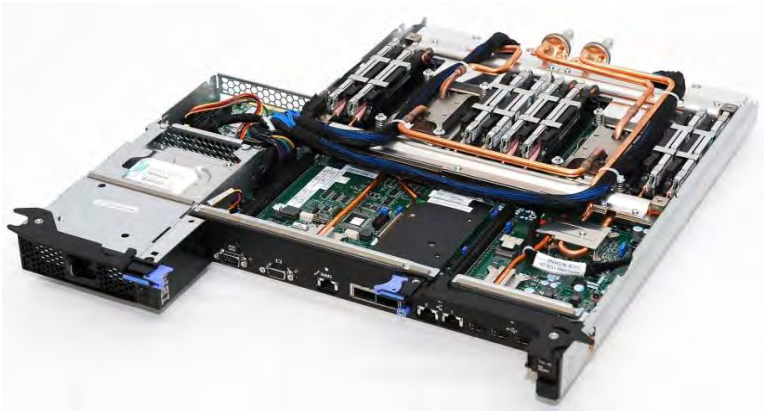

iDataplex DWC Rack w/ water cooled nodes
(rear view of water manifolds)

Heat Profile of SuperMUC (2/2013)

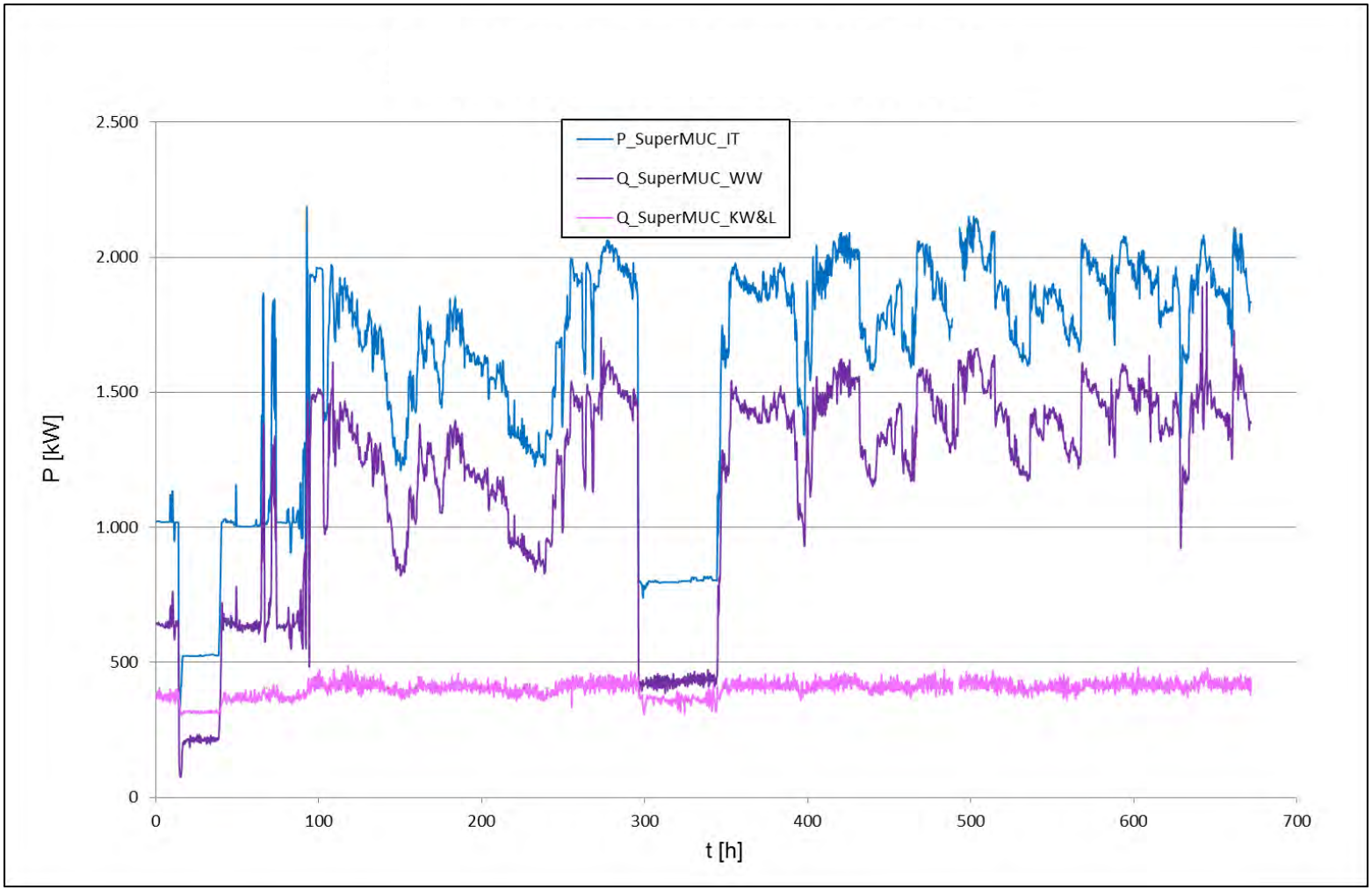

CASE #1: Cooling Towers

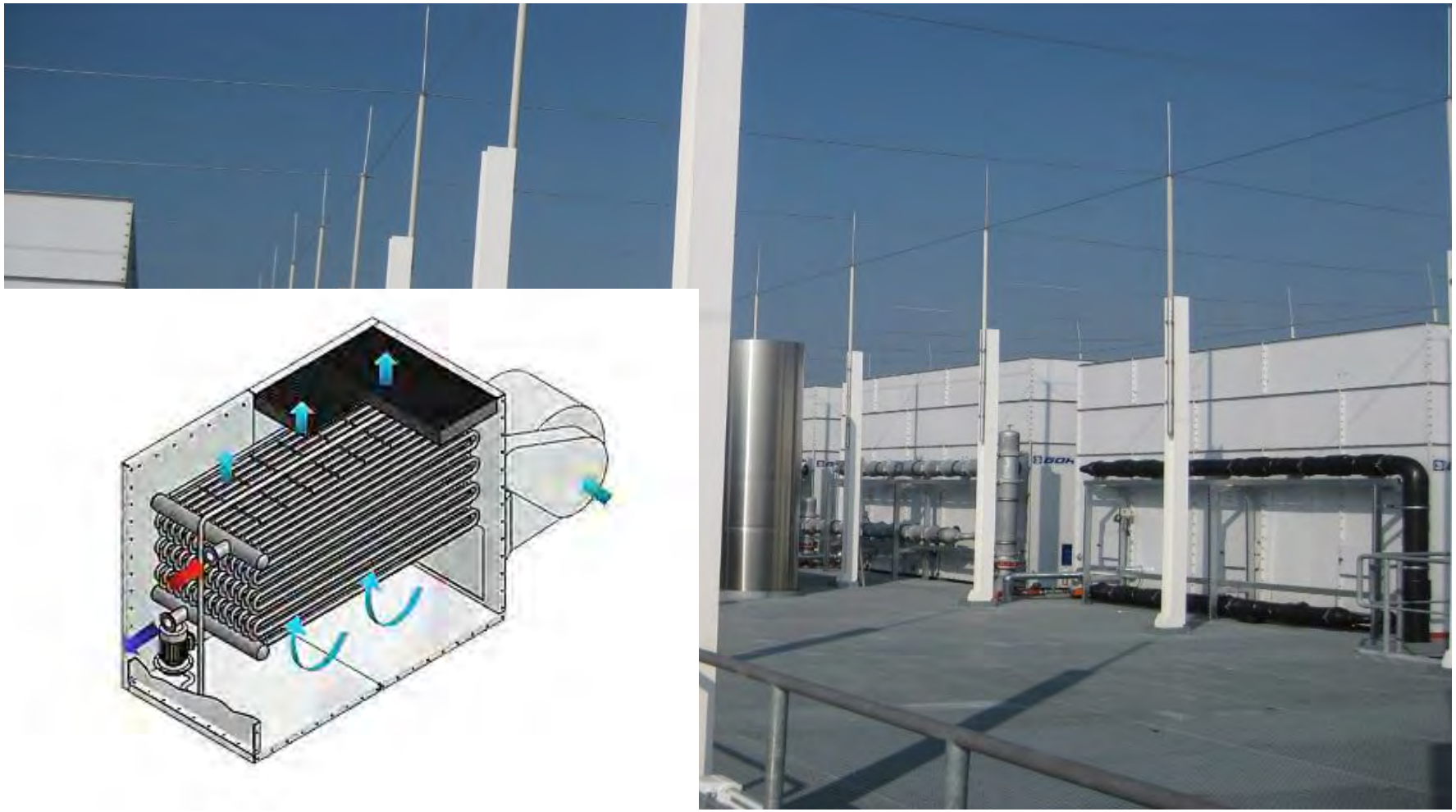

Malfunction of Water Level Sensors

- **Issue:**
  - **Water demand cooling loop increased**
    - **Filling volume: 7 m³**
    - **Typical feed: 1+ m³/h**
    - **Observed losses: 1 – 2 m³ in hours or days**
- **Investigations:**
  - **Load tests of the cooling towers**
  - **Inspection of the control system**
  - **Examination of the measuring devices**
- **Reason:**
  - **Wrong dimensions of the filling level sensor installed**
- **Root cause:**
  - **Main contractor did not use the sensor recommended by the manufacturer of the cooling tower**

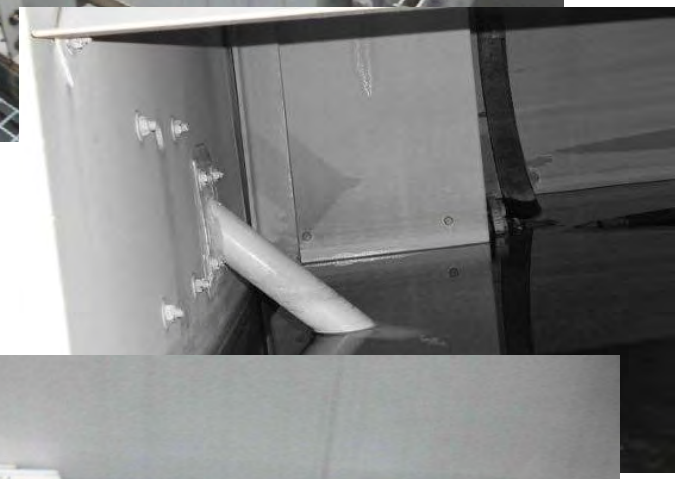

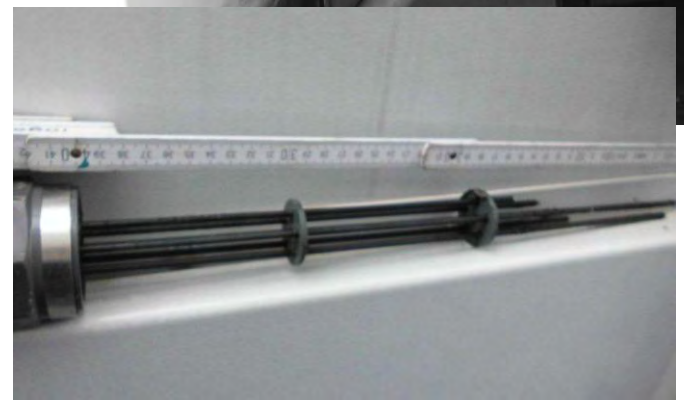

CASE #2: Operating Control
Warm Water Cooling Infrastructure

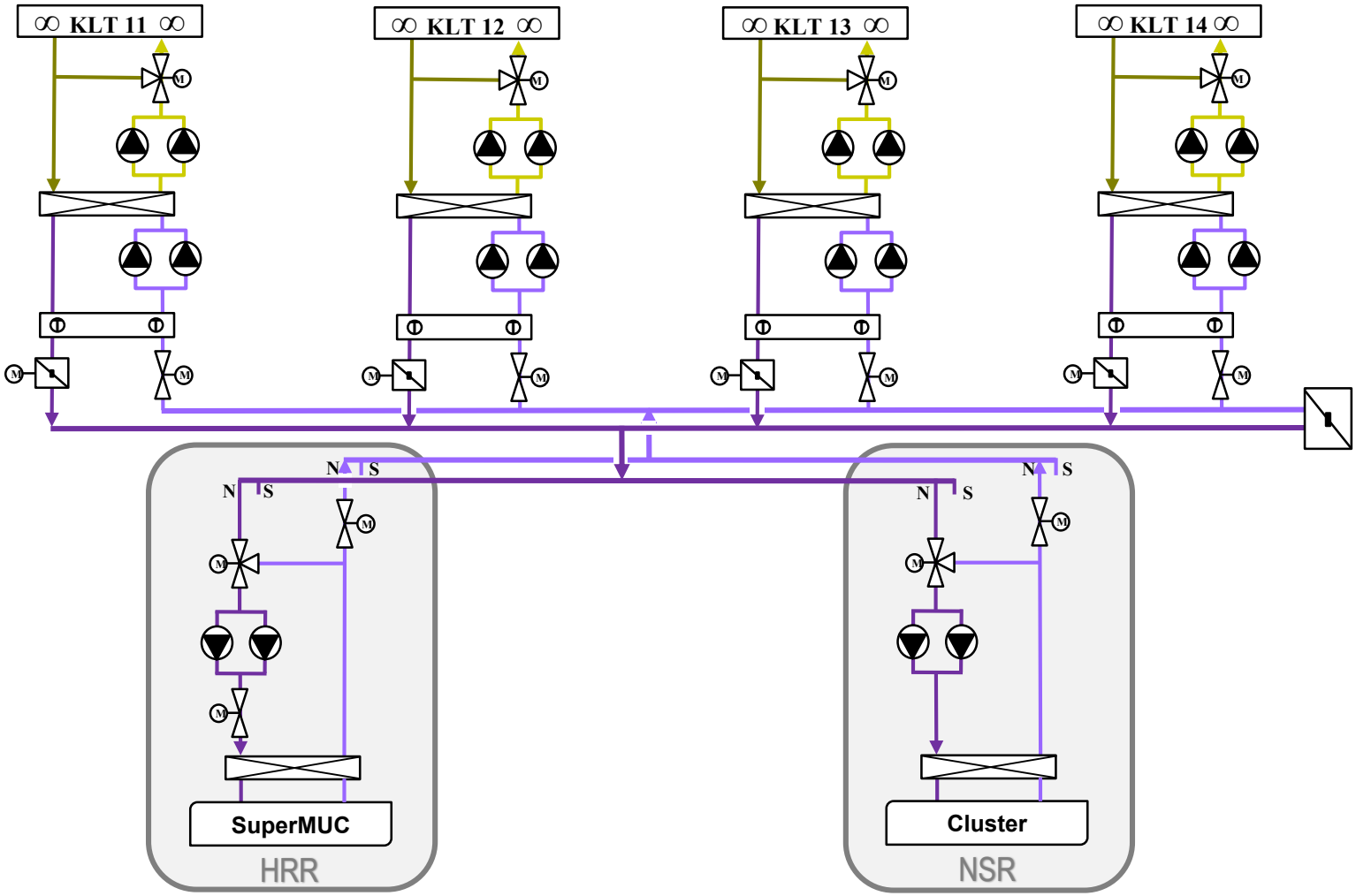

Operating Control: Test of ΔT_{inlet}(NSR) = -20 K
Response of Warm Water Cooling Infrastructure

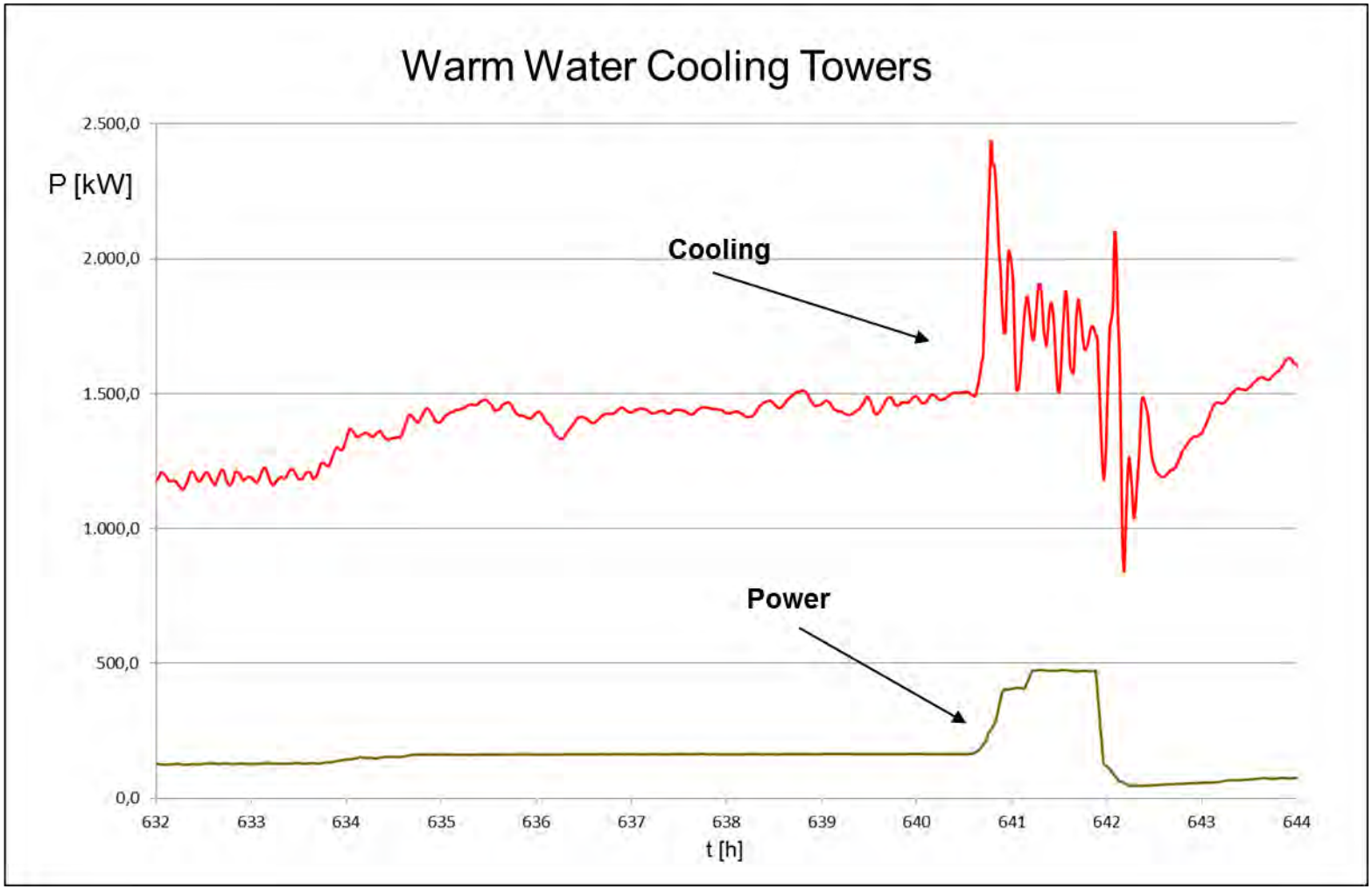

Operating Control: Test of ΔT_{inlet}(NSR) = -20 K

Response of Warm Water Cooling Infrastructure

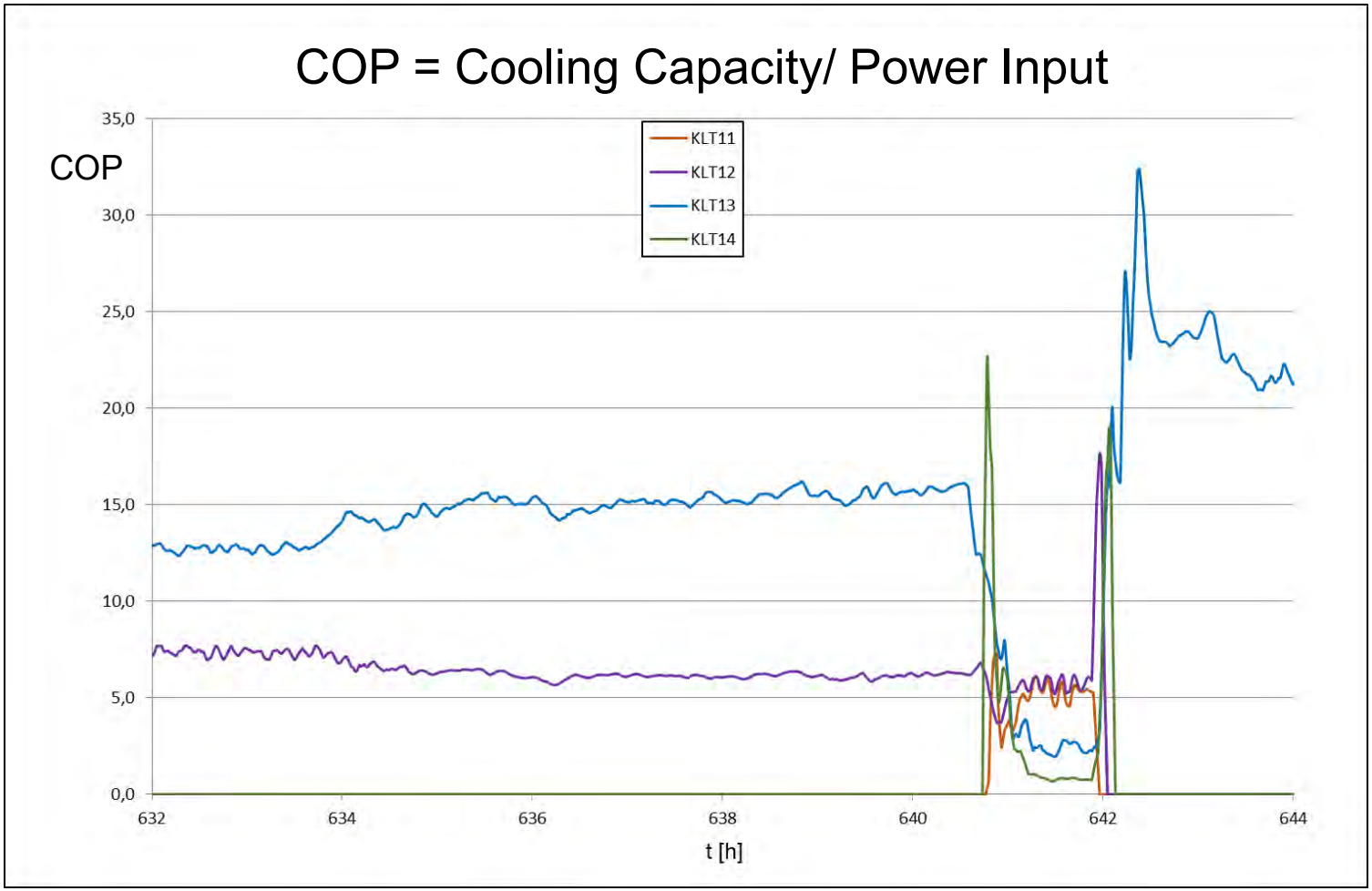

WWW.SIMOPEK.DE

Thank You!

Energy Efficient HPC: The Four Pillar Model

Neighboring Buildings

Utility Providers

Goal: Improve PUE (Power Usage Effectiveness)	Goal: Reduce Hardware Power Consumption	Goal: Optimize Resource Usage, Tune System	Goal: Optimize Application Performance
Building Infrastructures	HPC System Hardware	HPC System Software	HPC Applications

Data Center (Goal: Reduce Total Cost of Operation)

Global Optimization Strategy