Oak Ridge National Laboratory
Computing and Computational Sciences

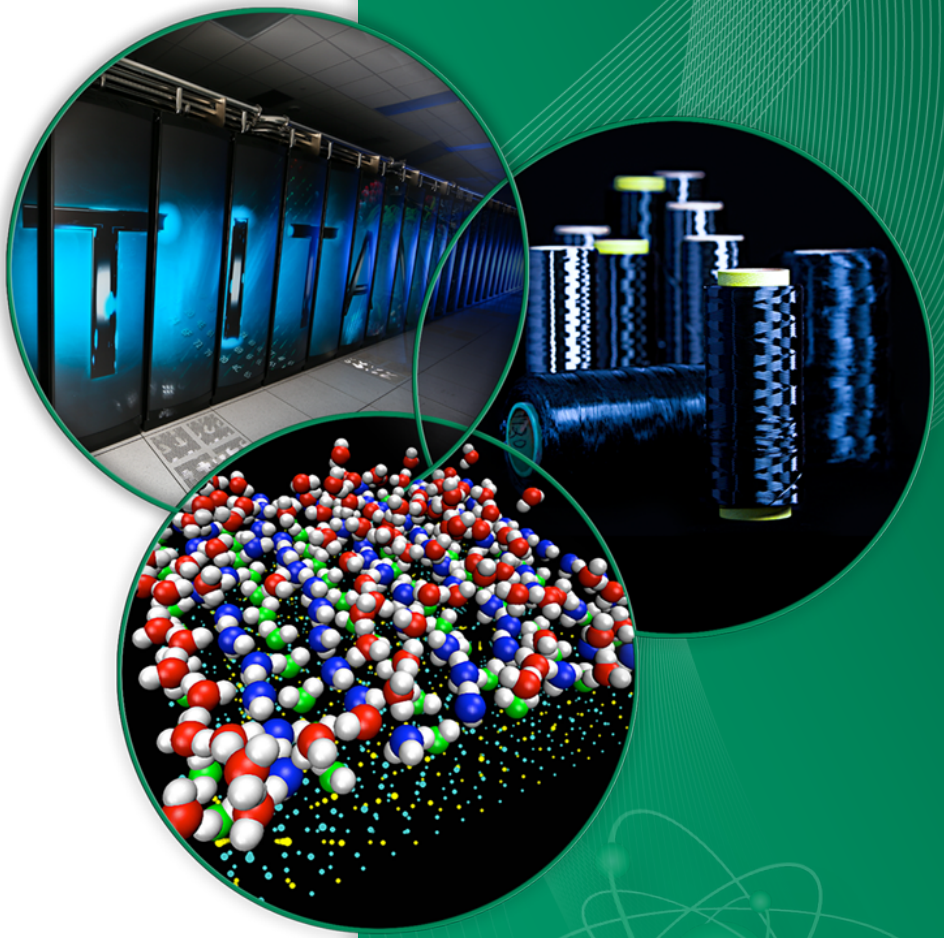

Use Case: Quantifying the Energy Efficiency of a Computing System

Presented by:

Chung-Hsing Hsu, ORNL

hsuc@ornl.gov

4th Annual EE HPC WG Workshop
November 17, 2013

Energy Efficiency of a System

- Several places to improve energy efficiency.

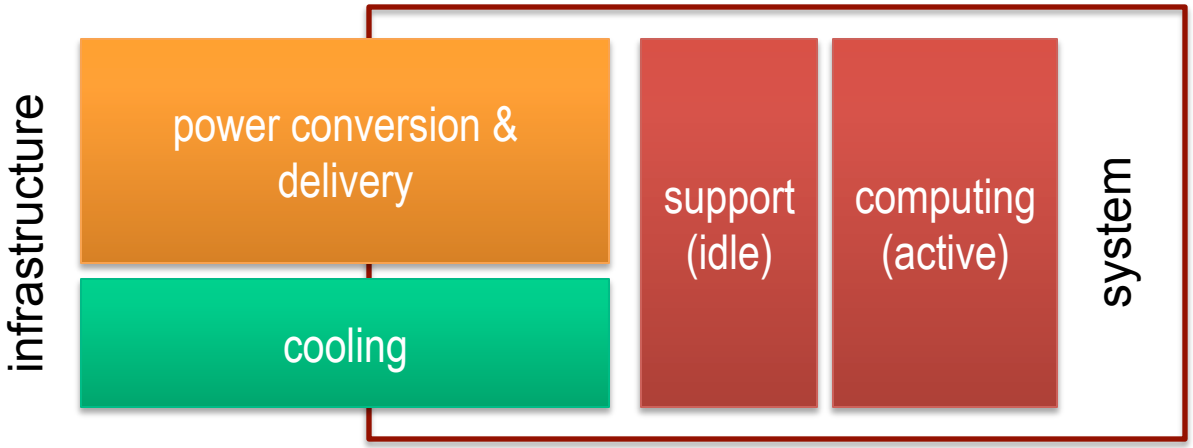

- Much focus on infrastructure, and good progress.
- Next focus on system itself.
- Accurate power breakdown needed to aim.

$$\text{ITUE} = \frac{\text{total energy into the IT equipment}}{\text{total energy into the compute components}}$$

A System Architecture

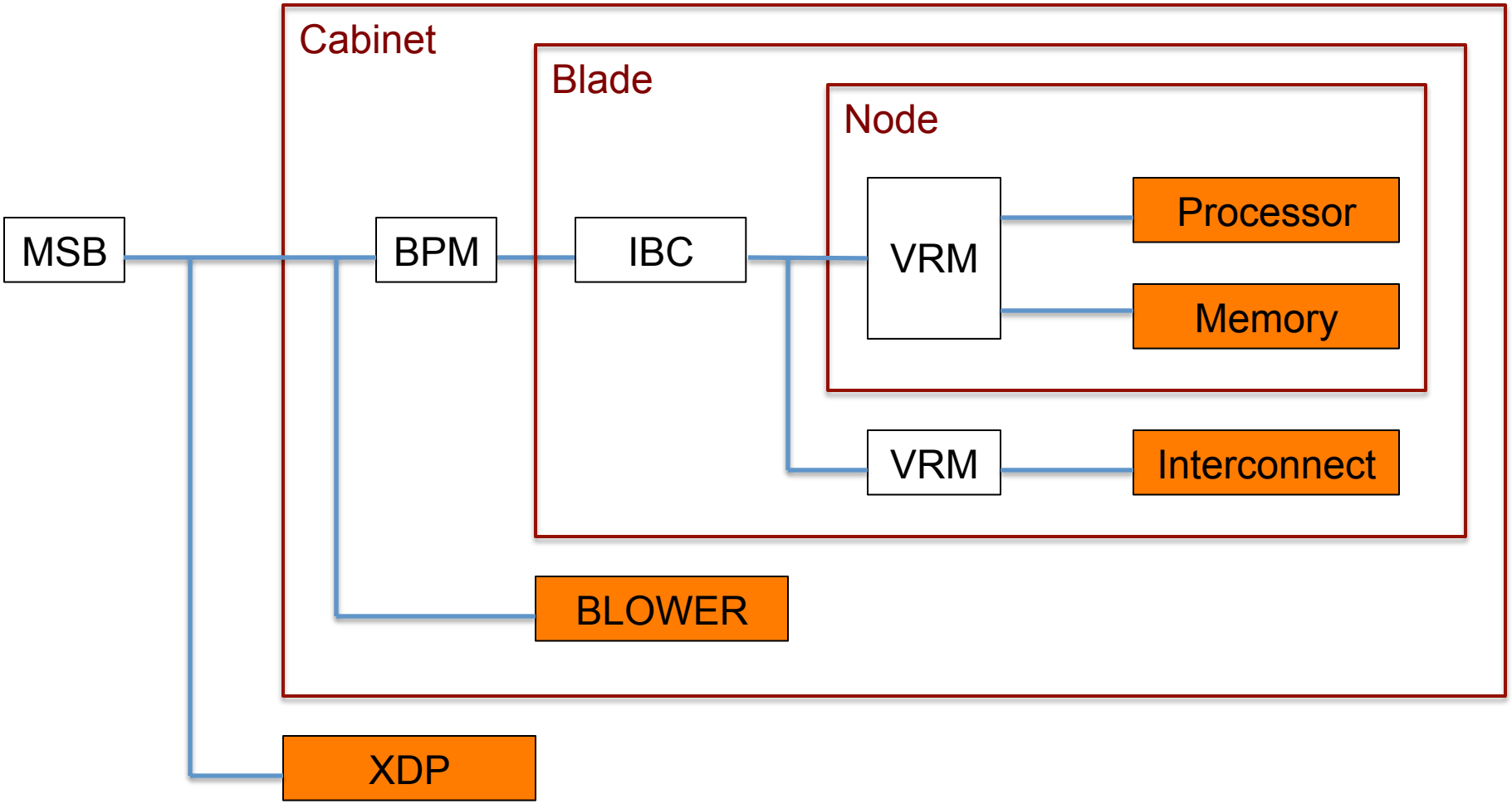

Information courtesy of Rob Rongstad, Cray Inc.

Power Breakdown of Jaguar

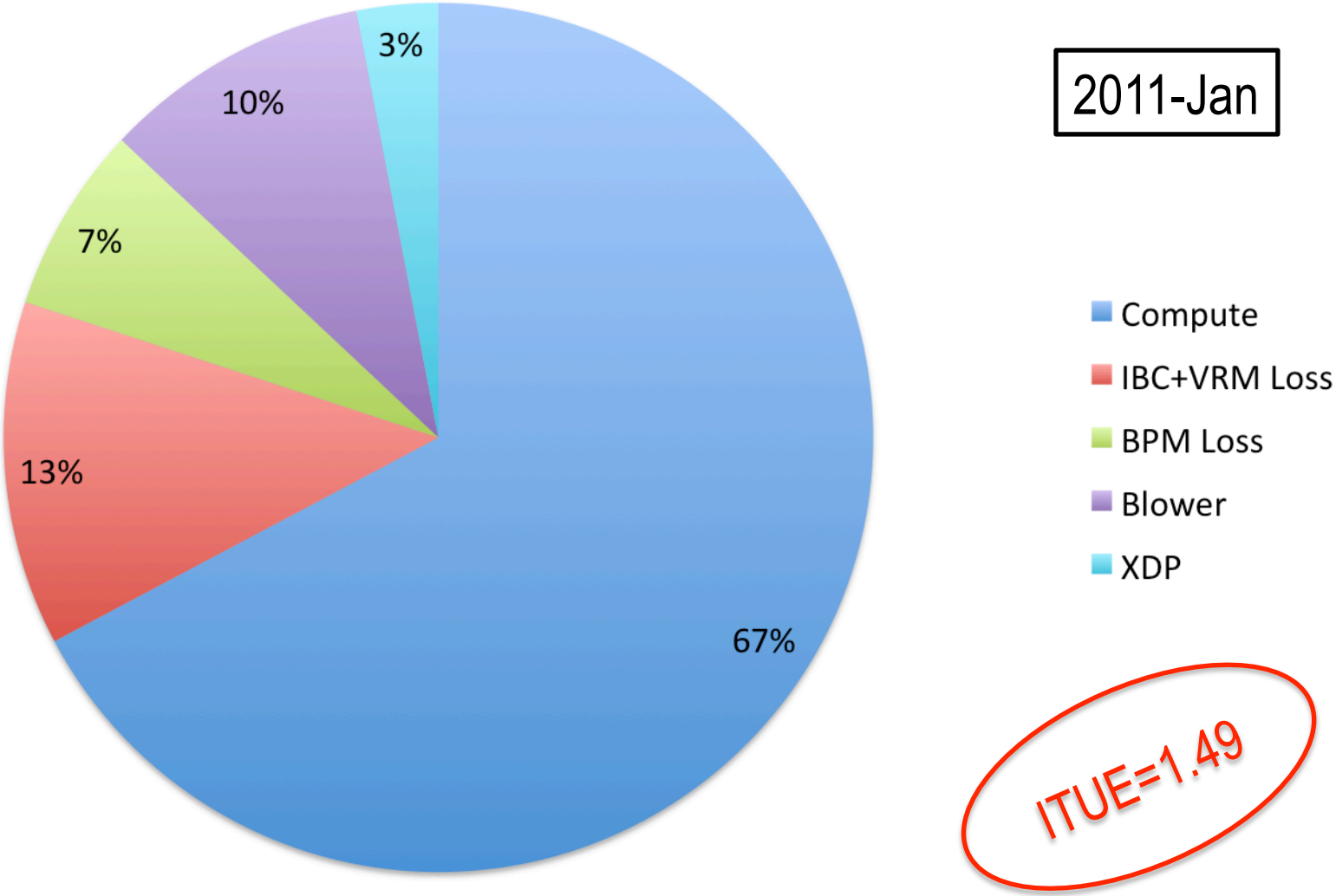

For every Joule in compute, 0.5 additional Joules are needed

Power Breakdown of Jaguar

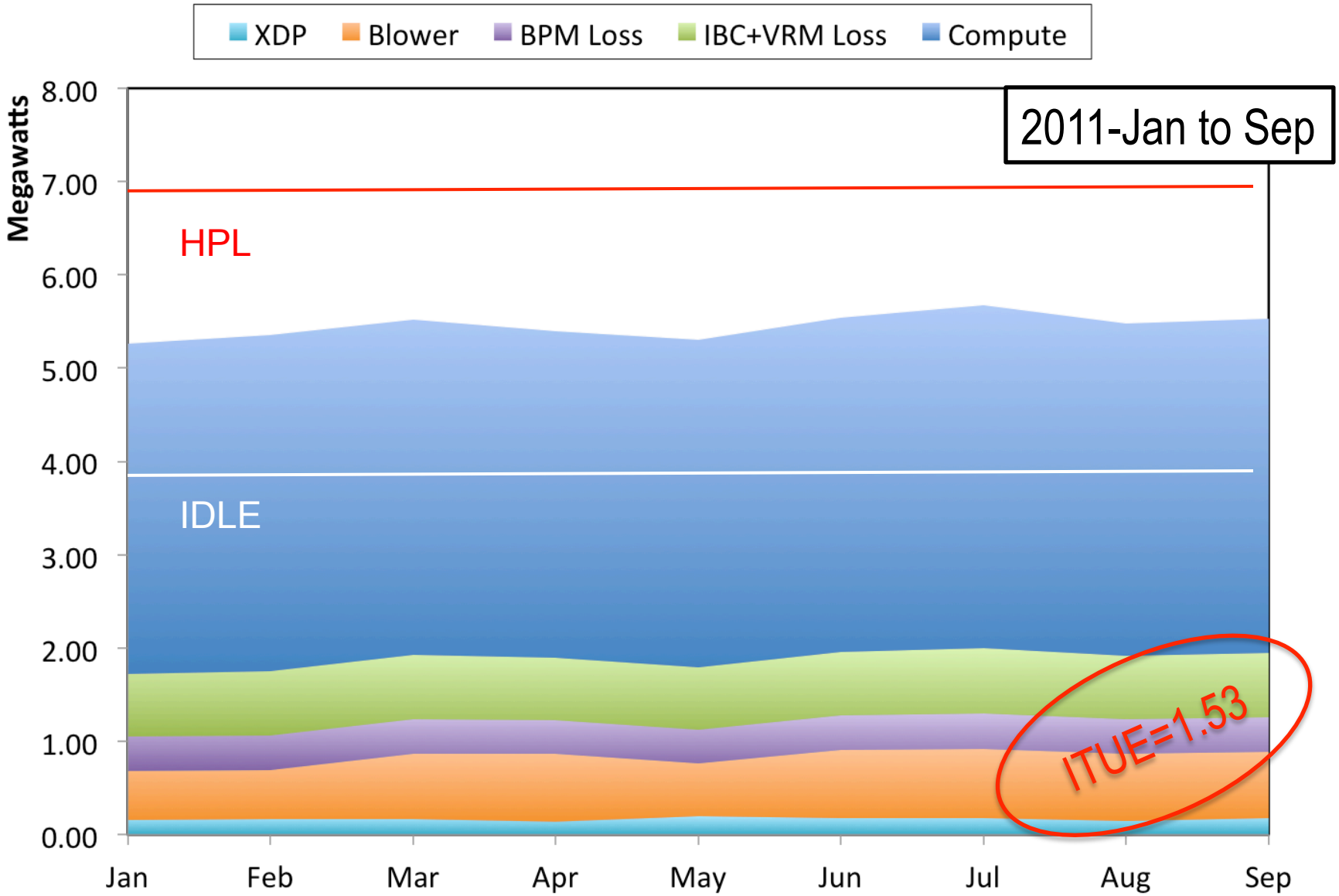

We Currently Have

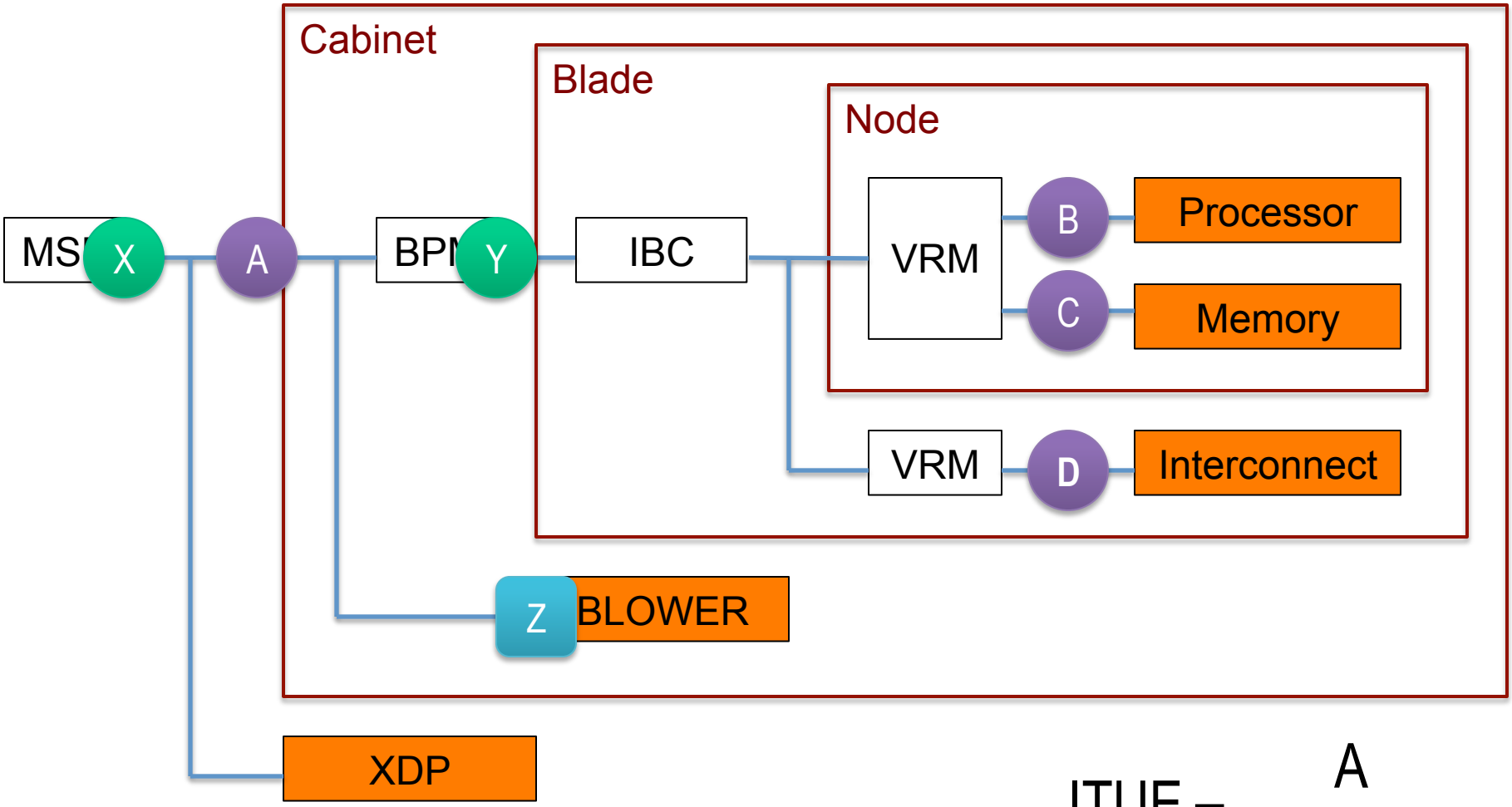

$$ITUE = \frac{A}{B + C + D}$$

Information courtesy of Rob Rongstad, Cray Inc.

We Need/Want

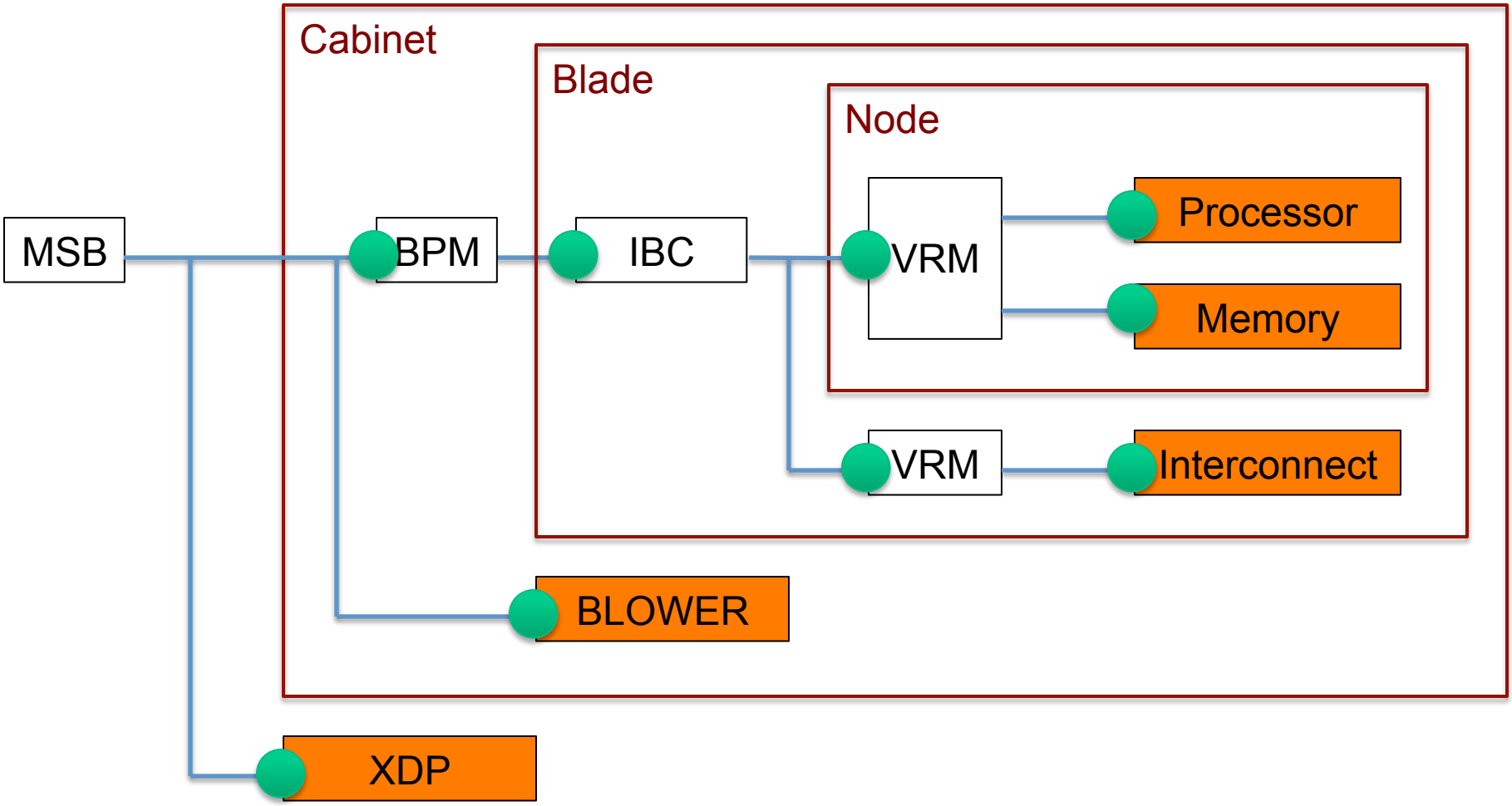

Information courtesy of Rob Rongstad, Cray Inc.

Acknowledgements

Thank You!

This work was supported by ORNL's Extreme Scale Systems Center funded by the United States Department of Defense and used resources of Oak Ridge Leadership Computing Facility.