DC Power Demonstration for HPC

UCSD Project GreenLight: Dr. Tom DeFanti, P.I., Dr. Greg Hidley
LBNL: William Tschudi, PE
EPRI: Dennis Symanski

Why Consider DC Power?

- Power Distribution Conversion Losses
- Power Quality Issues
- Capital Cost Reduction
- Ease of Adopting DC Renewable Energy
- Other Infrastructure Energy Savings
  - DC Variable Speed Drives
  - DC Lighting

Conversion losses vary and can be quite large

Power Supplies in IT equipment

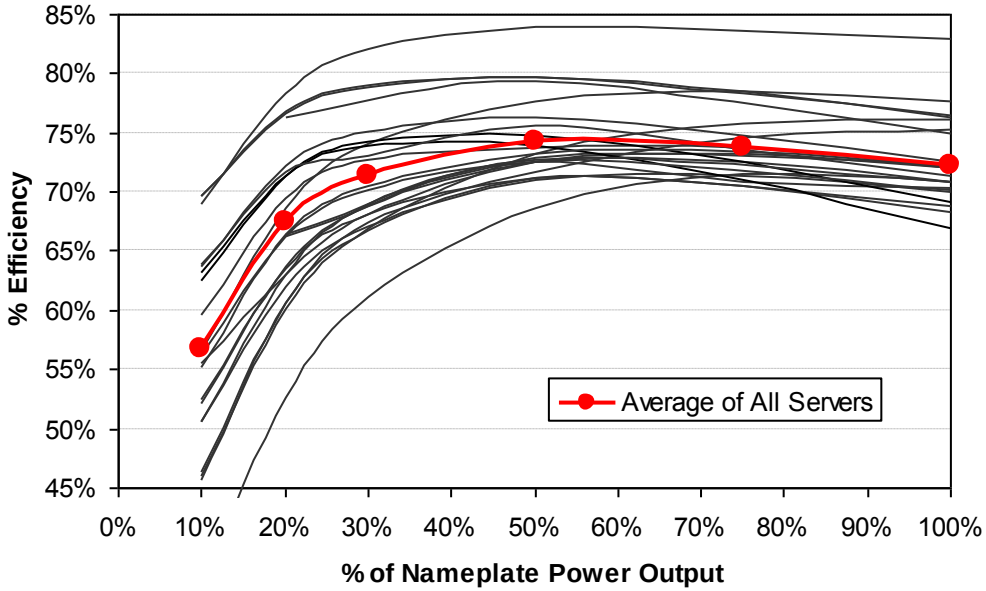

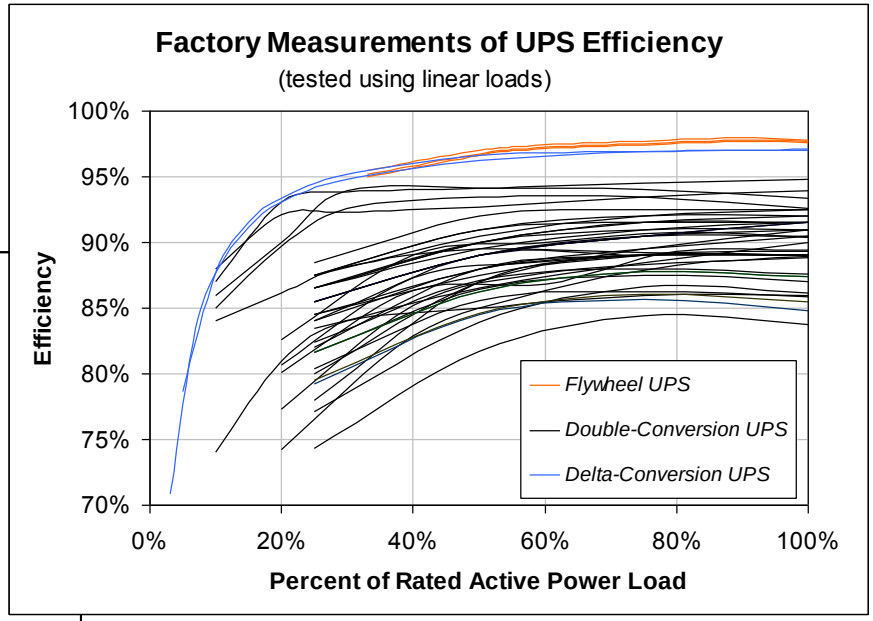

Uninterruptible Power Supplies (UPS)

source: LBNL research

HPC centers are not Data Centers

- Little use of UPS – One of the Losses goes away
- Some distribute high voltage AC close to load
- Some HPC vendors convert at rack level and distribute to rack
- Other benefits Still Available

DC Power Demonstration Seeks to Reduce Data Center Power Conversions

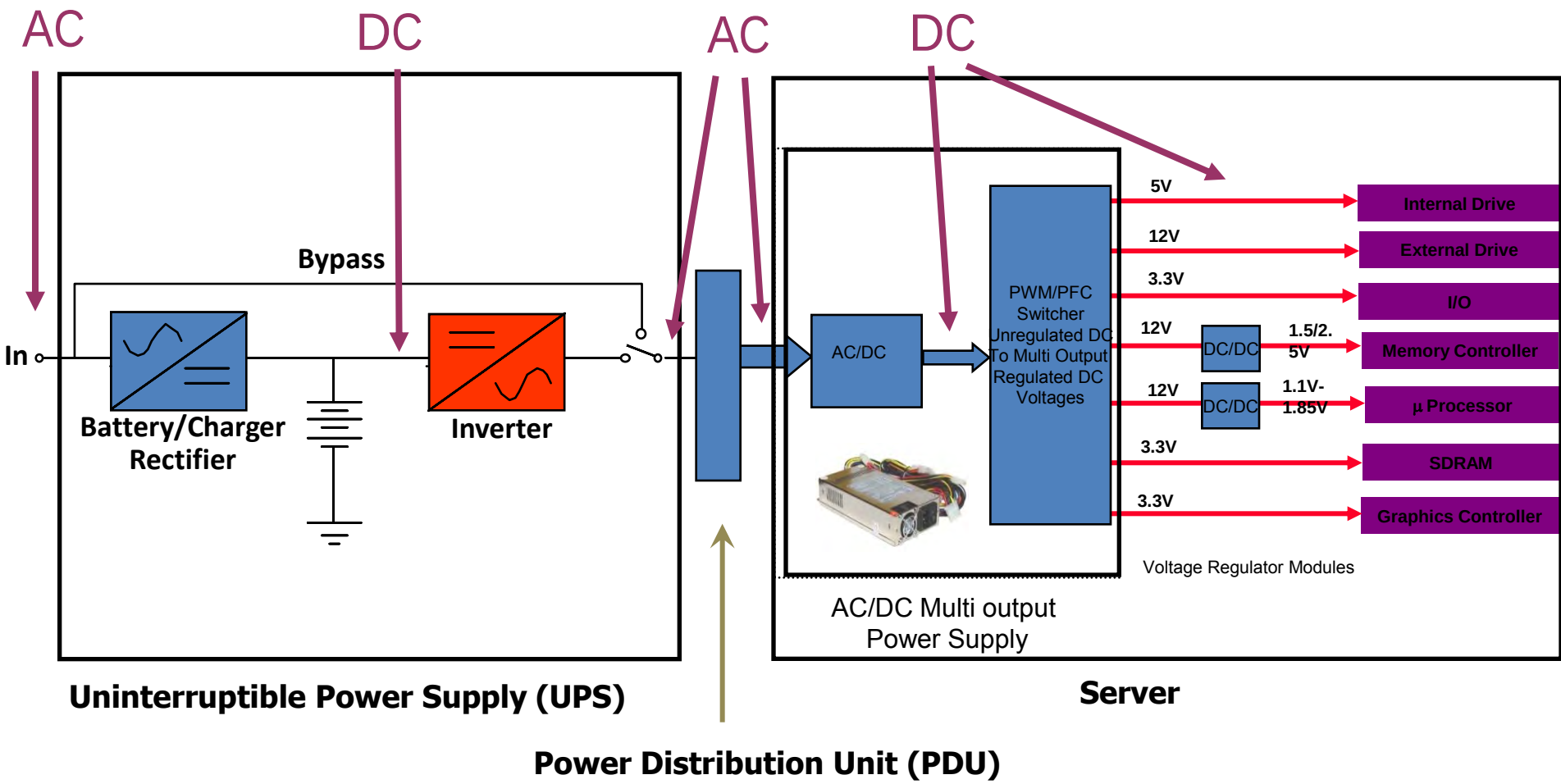

Facility-Level DC Distribution

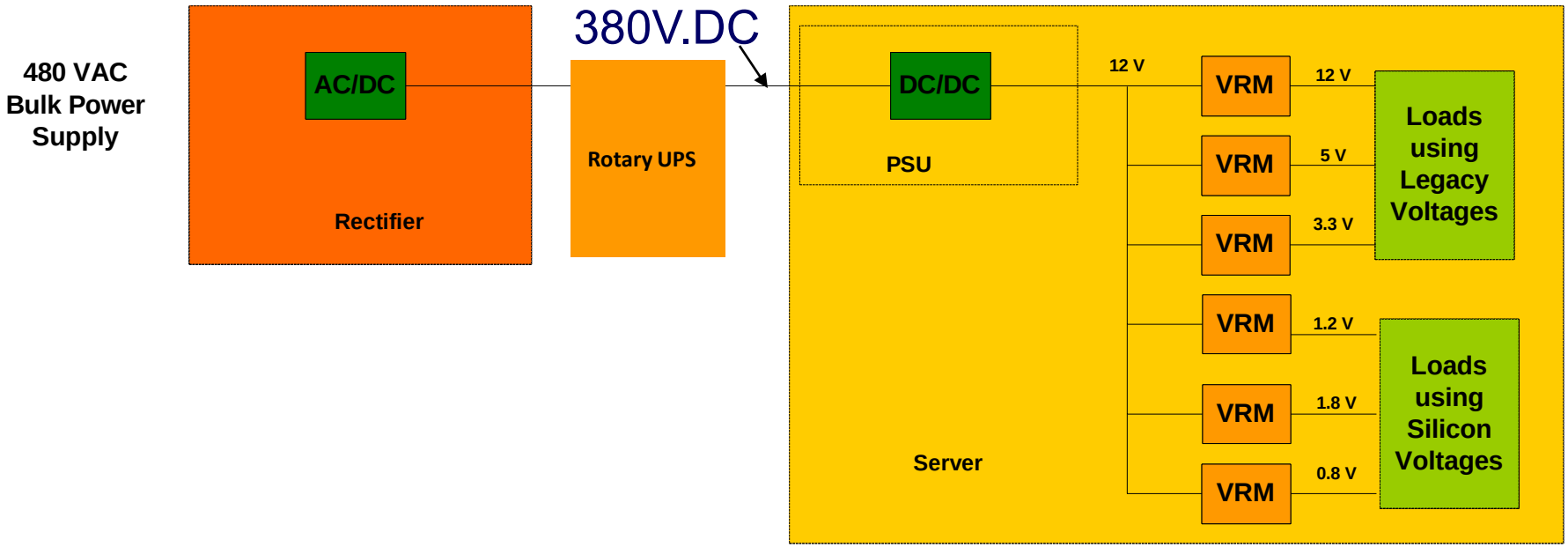

Overview of 380VDC Power Distribution

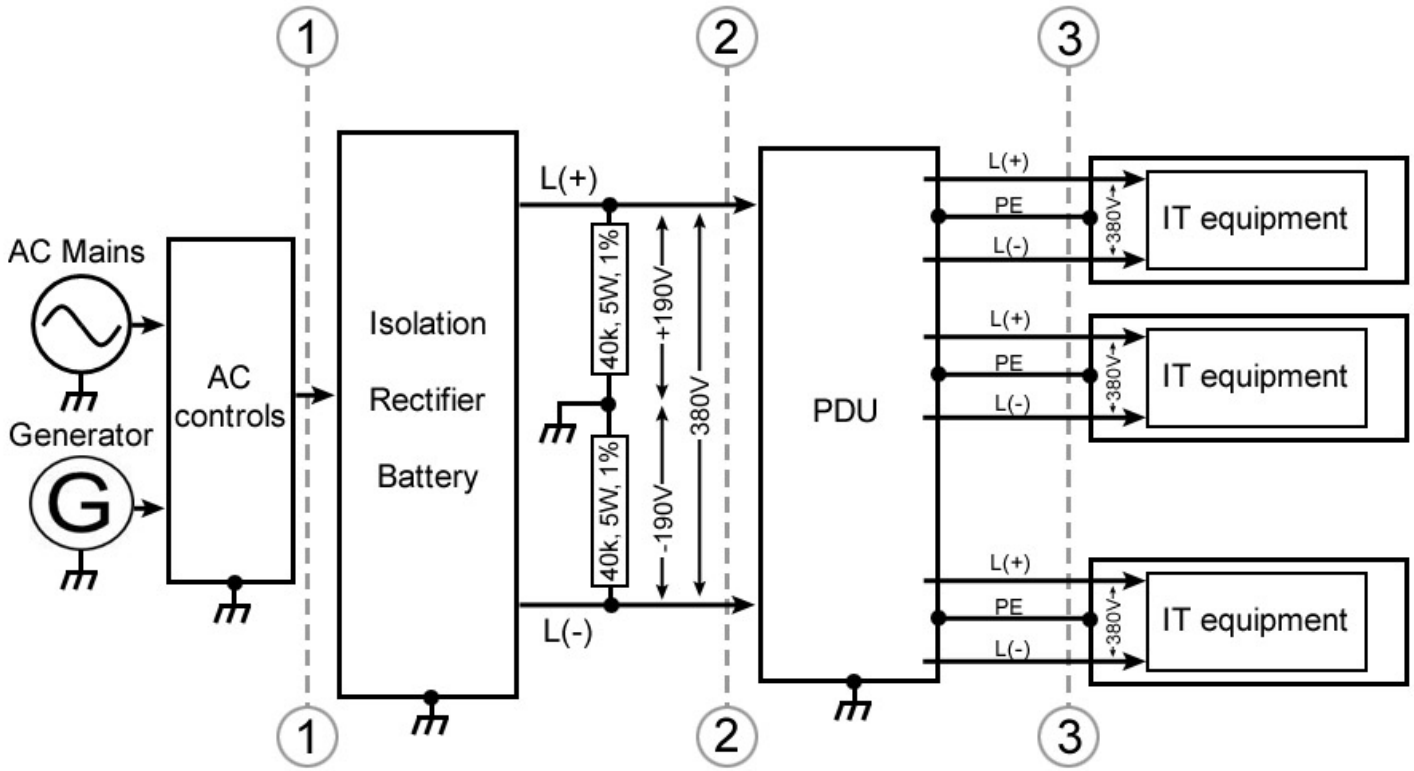

DC Power is not New

- Many uses in Industry, Military, Transportation
- DC Codes and Standards Exist for this Application
- UL Rated Equipment Exists
- 380 V. Power Supplies Coming to Market
  - Delta
  - IBM
- Unique Opportunity for World Wide Standard – For Voltages and Connectors
- Telecom Industry has used 48 V. DC Reliably Since the Beginning

IT specific connectors have been developed

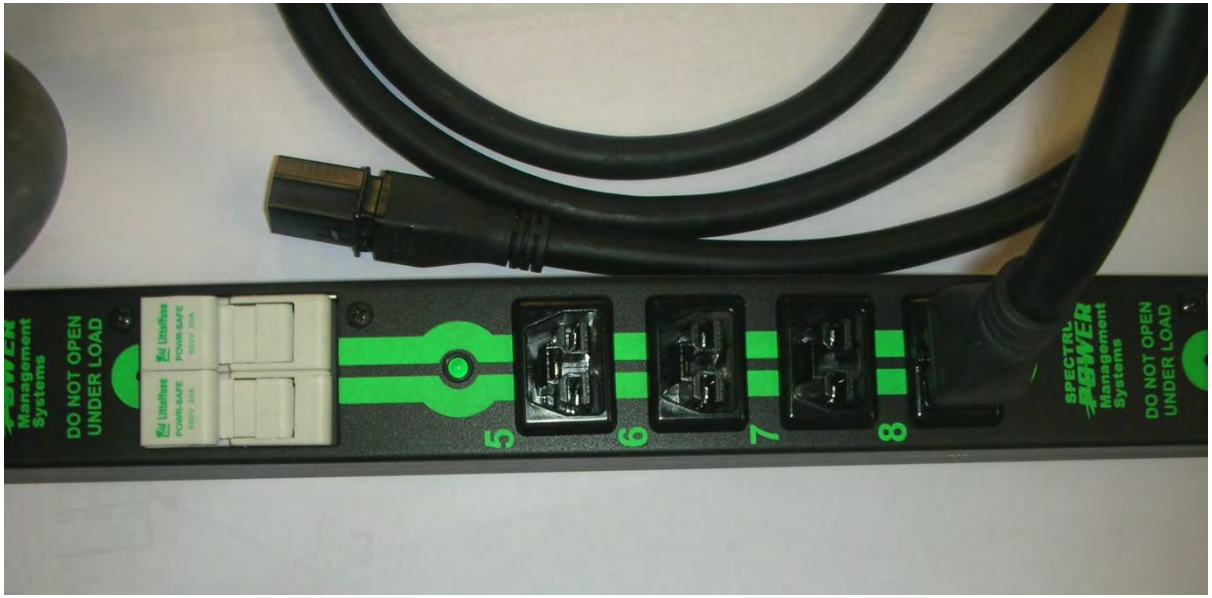

Organizations Already Involved with >48 VDC

International Electrotechnical Commission (IEC)
European Telecommunications Standards Institute (ETSI)
International Telecommunications Union (ITU)

- -

Electric Power Research Institute
Lawrence Berkeley National Lab

- -

The Green Grid
DC Power Partners
Emerge Alliance

- -

Photovoltaic Industry
Electric Car Industry
Light Rail Industry

- -

NTT/Orange-France Telecomm/Syracuse Univ/UC San Diego/Korea Telecom/---

The UCSD GreenLight Project:
Instrumenting the Energy Use of Computational Science

- Measure, Monitor, & Web Publish Real-Time Sensor Outputs
  - Via Service-oriented Architectures
  - Allow Researchers Anywhere To Study Computing Energy Cost
  - Enable Scientists To Explore Tactics For Maximizing Work/Watt
- DC Powered Systems in Operation for Nearly 3 Months without incident

On-line Dashboard

"Tap" for details

Power utilization

Enterprise reach

Multiple perspectives

Zoom-in Analysis

History over several days.

Zoom on desired time range.

Hint on each sample point.

Automatic average area.

Multiple sensors per asset with up to 1 min sampling resolution.

UCSD is Installing Zero Carbon Emission Solar and Fuel Cell DC Electricity Generators

San Diego's Point Loma Wastewater Treatment Plant Produces Waste Methane

UCSD 2.8 Megawatt Fuel Cell Power Plant Uses Methane

Available Late 2011

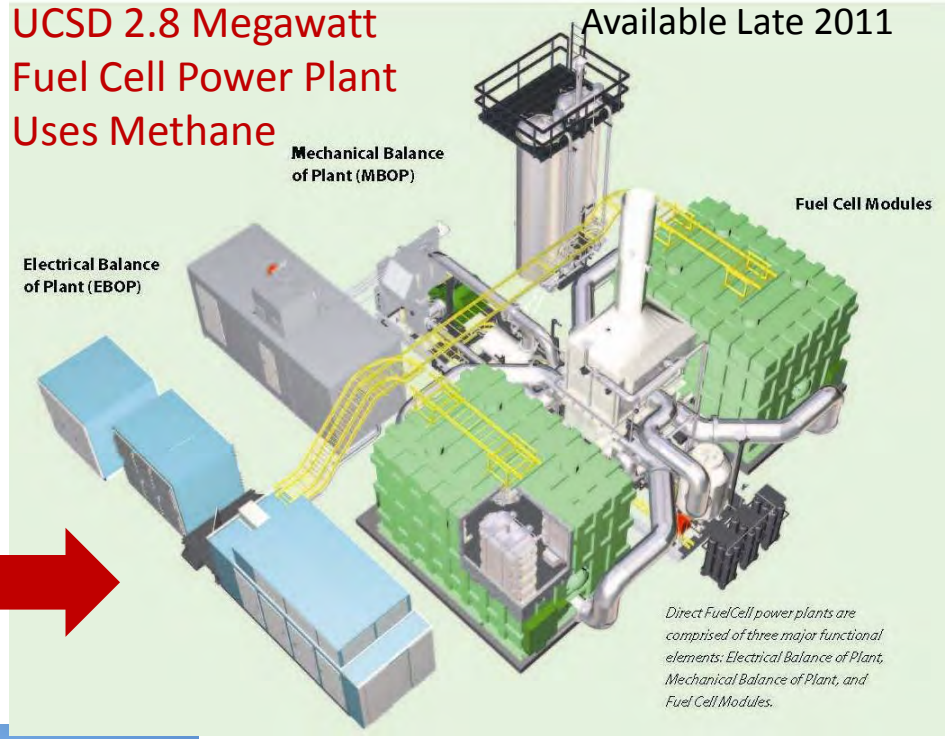

2 Megawatt of Solar Power Cells Installed

Zero Carbon GreenLight Experiment: Direct DC-Powered Modular Data Center

- Concept—Avoid DC to AC to DC Conversion Losses
  - Computers Use DC Power Internally
  - Solar and Fuel Cells Produce DC
  - Both Plug into the AC Power Grid
  - Can We Use DC Directly (With or Without the AC Grid)?

DC Fuel Cell 2800kWatts
Container<200kWatt

- DC Generation from Renewable Can Be Intermittent
  - Depends on Source
    - Solar, Wind, Fuel Cell, Hydro
  - Can Use Sensors to Shut Down or Sleep Computers
  - Can Use Virtualization to Halt/Shift Jobs
- DC Generation Projects Just Starting
  - Collaboration with Oracle, LBNL, EPRI, Direct Power, Intel, Delta, Emerson
  - NSF GreenLight Year 2 and Year 3 Funds
  - California Energy Commission support

DC Power Partners

AMD
NEMA Setting Standards for Excellence
DELL
hp invent
IBM
intel Leap ahead
Microsoft
Rackable systems
Sun microsystems
Berkeley Lab
HUBBELL
at&t
psma
ecos
CISCO
PSL Power Standards Lab
DELTA
nec 2008 NFPA 70
EATON
EMC² where information lives
EMERSON Network Power
ERICSSON TAKING YOU FORWARD
DIRECT POWER TECHNOLOGIES, INC. Providing Efficient Reliability
EMERSON
GE
VALIDUS DC SYSTEMS, LLC
EFORE ENERGY FOR ELECTRONICS
FUJITSU COMPUTERS SIEMENS
SATCON Power Systems
APP Anderson Power Products
NTTFACILITIES
PANDUIT
Nextek Power Systems
MORRISON HERSHFIELD
Pass & Seymour legrand

For more information

- http://greenlight.calit2.net
- http://hightech.lbl.gov/datacenters