Water-Cooled Servers

Common Designs, Components, and Processes

White Paper Developed by
ASHRAE Technical Committee 9.9,
Mission Critical Facilities, Data Centers, Technology Spaces and Electronic Equipment

ASHRAE®
Atlanta

Contributors to White Paper

- MattArchibald—Lenovo
- PaulArtman—Lenovo
- TozerBandorawalla—Intel
- JerrodButerbaugh—Lenovo
- NeilChauhan—DLBAssociates
- ShanjiuChi—HuaweiTechnologiesCompany,LDT
- BryceCox—OregonState
- DustinDemetriou—IBM
- MikeEllsworth—IBM
- VadimGektin—HuaweiTechnologiesCompany,LDT
- JoshuaGess—OregonState
- DavidGrant—ONRL
- JohnGross—J.M.GrossEngineering
- SakamotoHitoshi—HuaweiTechnologiesCompany,LDT
- HughHudson—DaikinApplied
- HuiJia—HuaweiTechnologiesCompany,LDT
- DevdattaKulkarni—Intel
- ElizabethLanger—CPC(ColderProductsCompany)
- TimMcCann—HewlettPackardEnterprise
- MikePatterson—Intel,Retired
- RogerSchmidt—IBM,Retired
- AustinShelnutt—Dell
- SeanT.Sivapalan—Intel
- ValiSorell—SorellEngineering
- ChrisStack—DLBAssociates
- MarkSteinke—CrayInc.
- JeiWei—Fujitsu
- CaseyWinkel—Intel

Presenters:(in order of presenting)

Roger Schmidt
Austin Shelnutt
Mark Steinke

Contents

- Objectives of the White Paper
- Introduction to water-cooled servers
- Liquid Loop Definitions
- Water Quality
- CDU Implementations
- Non-CDU Implementations
- Wetted Materials
- Filtration
- Pressure Testing
- Fluid Couplings
- Flex Hose

Objective of the White Paper

Include: Focus on common processes, parts, materials in a water cooled system design

Don't include: Parts in a water-cooled IT system that are specific to the product design such as cold plates, manifolds, arrangement of piping, pumps, valves, etc.

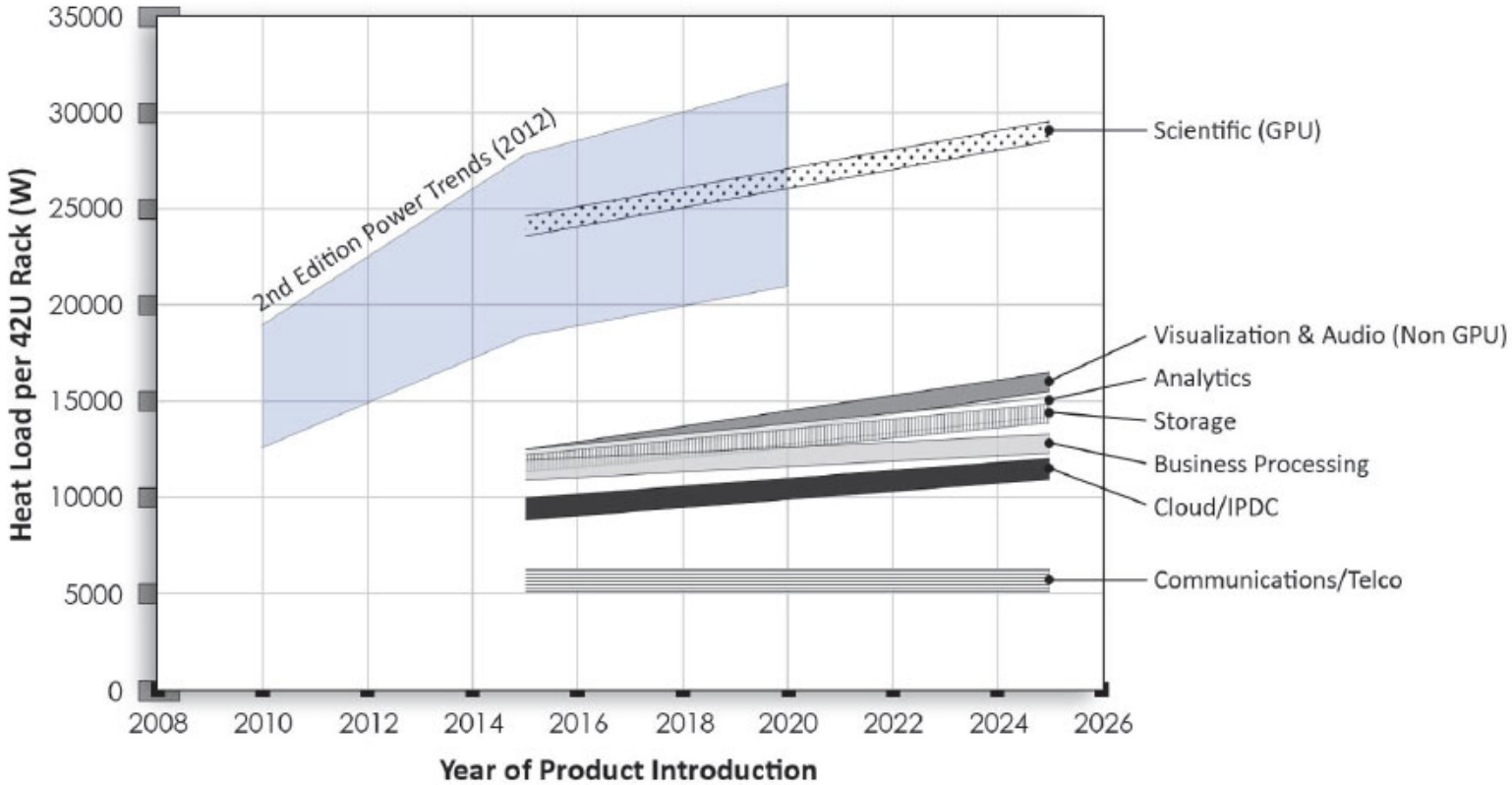

Figure 2 Air-cooled 2U two-socket server power trends (ASHRAE 2018).

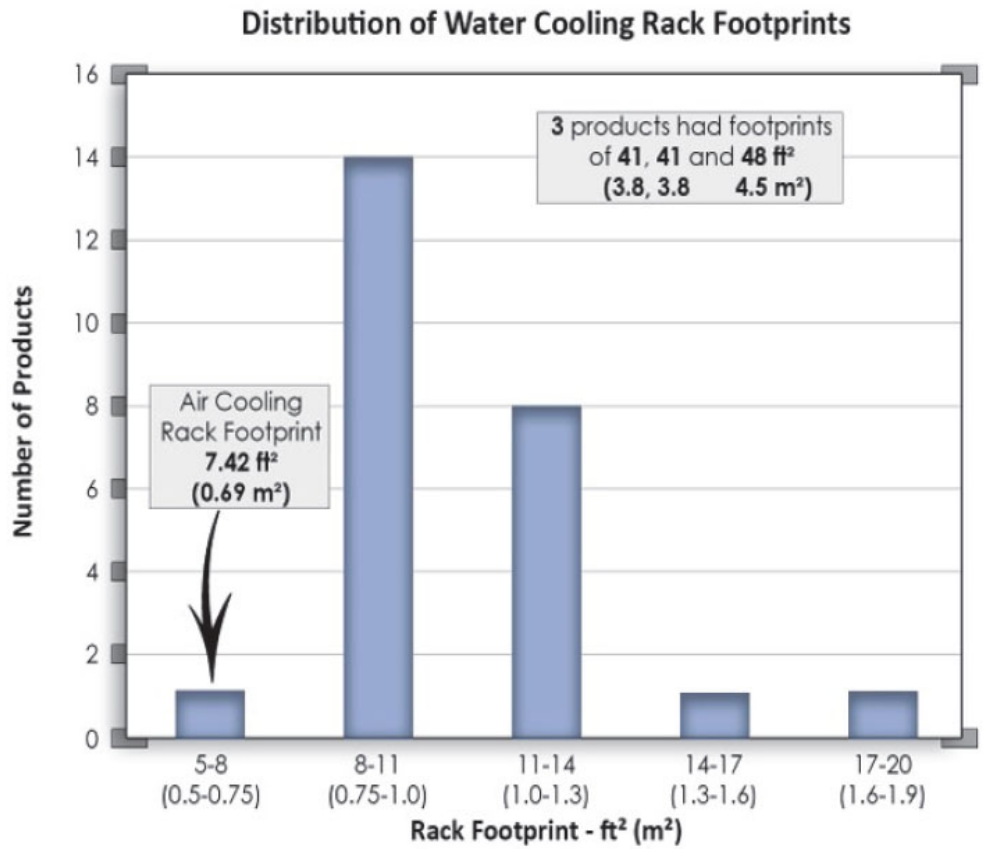

Figure 3 Distribution of water-cooled server rack footprint areas (ft^2).

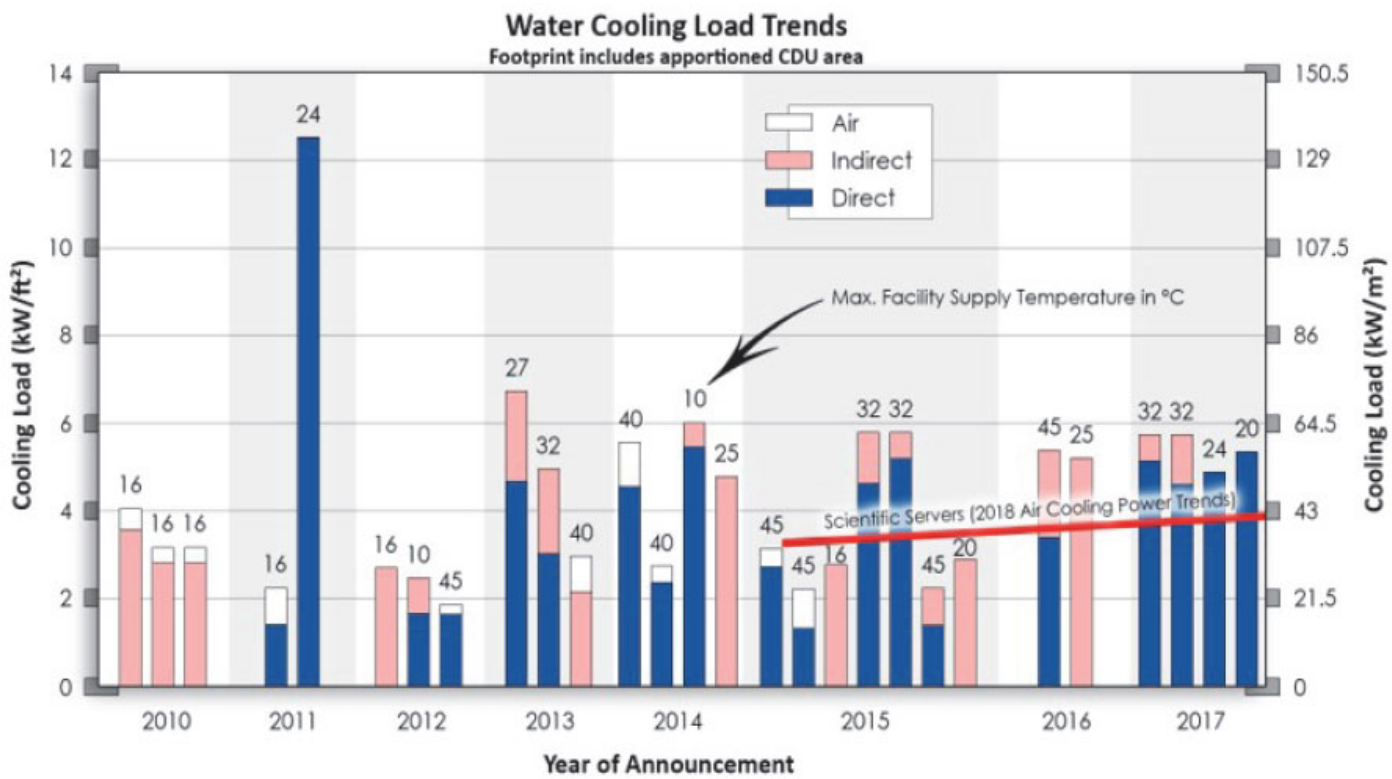

Figure 4 Water cooling load trends from 2010 to 2017.

Data obtained through personal communication with HPE, SGI, Fujitsu, IBM, Dell, Huawei, and Cray.

Liquid Loop Definitions

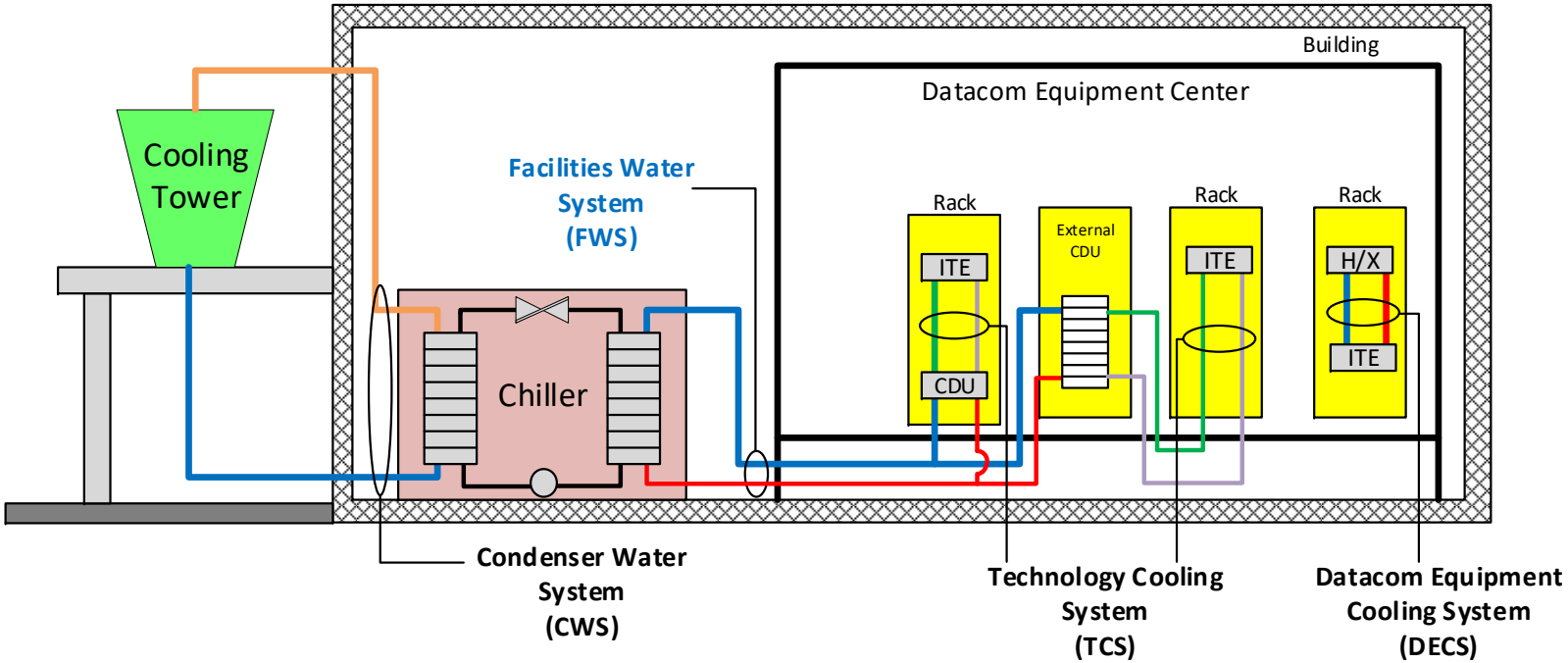

Datacom Equipment Cooling System (DECS): This system does not extend beyond the IT rack. It is a loop within the rack that is intended to perform heat transfer from the heat-producing components (CPU, memory, power supplies, etc.) to a fluid-cooled heat exchanger also contained within the IT rack. Some configurations may eliminate this loop and have the fluid from the coolant distribution unit (CDU) flow directly to the load. This loop may function in single-phase or two-phase heat transfer modes facilitated by heat pipes, thermosyphon, pumped fluids, and/or vapor-compression cycles. Fluids typically used in the datacom equipment include water, ethylene glycol or propylene glycol water mixtures, refrigerants, or dielectrics. At a minimum the datacom equipment cooling system would include a heat collection heat exchanger commonly referred to as cold plates (single phase) or evaporators (2-phase) as well as a heat-of-rejection heat exchanger which may be further enhanced with active components such as compressor/pump, control valves, electronic controls, etc.

Technology Cooling System (TCS): This system would not typically extend beyond the boundaries of the IT space. The exception is a configuration in which the CDU is located outside the data center. It serves as a dedicated fluid loop intended to perform heat transfer from the datacom equipment cooling system into the chilled-water system. This loop configuration is highly recommended, as it is needed to address specific fluid quality issues regarding temperature, purity, and pressure as required by the heat exchangers within the datacom equipment cooling systems. Fluids typically used in the technology cooling loop include water, ethylene glycol or propylene glycol and water mixture, refrigerants, or dielectrics. This loop may also function by single-phase or two-phase heat transfer modes and may facilitate transfer by heat pipes, thermosyphon, pumped fluids, and/or vapor-compression cycles. At a minimum the technology cooling system would include a heat collection heat exchanger (likely integral component of the datacom equipment cooling system), a heat rejection heat exchanger, as well as interconnecting piping. This system may be further enhanced with such active components as compressors/pumps, control valves, electronic controls, filters, hydronic accessories, etc.

Water Quality

- Updates to water quality parameters used in the Liquid Cooling Guideline book
- Collaboration from multiple OEMs, ITE manufacturers, and datacenter folks
- pH range increased in the TCS
  - Results in lessons learned
  - Desire to kill biologics in ever increasing warm water systems
- Corrosion inhibitor and Biocide STILL not specified and up to ITE mfg
- Monitoring
  - FWS usually dictated by site
  - TCS is case by case
  - Several methods
    - Frequent sampling
    - Tailing off sampling if data suggest
    - Online monitoring
    - Discrete sampling

Table 5.3 Water Quality Specifications for Facility Water System (FWS) Loop

Parameter	Recommended Limits
pH	7 to 9
Corrosion inhibitor	Required
Sulfides	<10 ppm
Sulfate	<100 ppm
Chloride	<50 ppm
Bacteria	< 1000 CFUs/mL
Total hardness (as $CaCO_3$)	<200 ppm
Residue after evaporation	<500 ppm
Turbidity	<20 NTU (Nephelometric)

Table 6.2 Water Quality Specifications—TCS Cooling Loop

Parameter	Recommended Limits
pH	7 to 9
Corrosion inhibitor	Required
Biocide	Required
Sulfides	<1 ppm
Sulfate	<10 ppm
Chloride	<5 ppm
Bacteria	<100 CFU/mL
Total hardness (as $CaCO_3$)	<20 ppm
Conductivity	0.20 to 20 micromho/cm
Total suspended solids	<3 ppm
Residue after evaporation	<50 ppm
Turbidity	<20 NTU (nephelometric)

White Paper Update

Parameter	FWS Table 5.3 [1]	TCS Table 6.2 [1]
pH	7 to 9	8.0 to 9.5
Corrosion Inhibitor(s)	Required	Required
Biocide	-	Required
Sulfide	< 10 ppm	< 1 ppm
Sulfate	< 100 ppm	< 10 ppm
Chloride	< 50 ppm	< 5 ppm
Bacteria	< 1,000 CFUs/mL	< 100 CFUs/mL
Total Hardness (as $CaCO_3$)	< 200 ppm	< 20 ppm
Conductivity	-	0.2 to 20 micromho/cm
Total Suspended Solids	-	< 3 ppm
Residue After Evaporation	< 500 ppm	< 50 ppm
Turbidity	< 20 NTU (Nephelometric)	< 20 NTU (Nephelometric)

CDU Implementations

CDU Objectives

- Transfer heat from TCS to FWS
- Circulation of TCS coolant
- Allows for a TCS coolant other than water (e.g. refrigerant or engineered fluid)
- Prevents condensation within the IT equipment by regulating TCS water above room dew point
- Establish and maintain a coolant quality and chemistry different from that associated with the FWS; more suitable to the TCS
- Flexible Coolant Temperature supplied to ITE

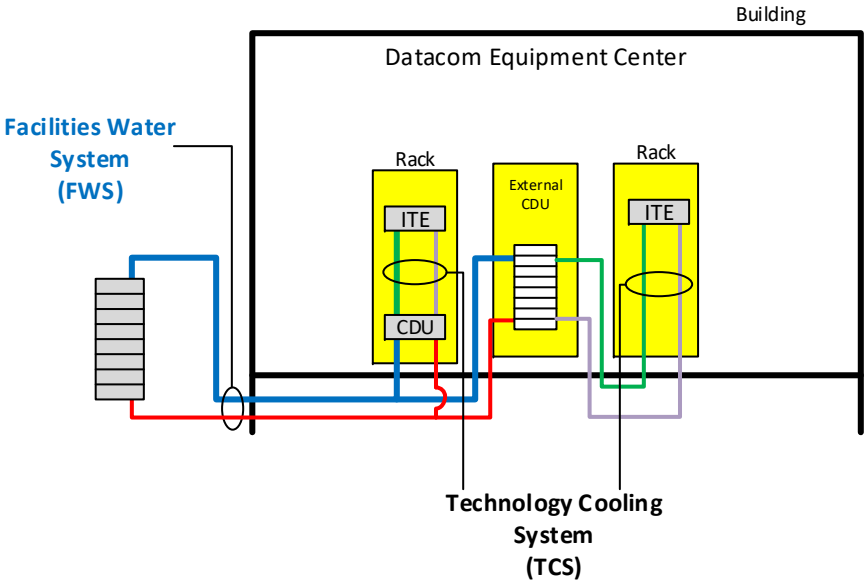

CDU Temperature Control

- Regulating the supply temperature of the TCS loop is one of the primary functions of the CDU. The supply water temperature provided by the CDU may be controlled by using any combination of bypass loops, proportional control valves, and/or variable speed pumps as a response to variation in FWS water temperatures and the heat load of the IT equipment. Typically, the TCS loop is further defined by the highest allowable temperature to support liquid cooling of the ITE, referred to as the upper bound. In addition, the lower bound temperature is defined for the TCS loop. A good definition for each limiting temperature is as follows.
  - **TCS Upper Bound**: this is the maximum TCS water supply temperature that can be sustained at a given flowrate to provide sufficient cooling capability to the attached ITE. Temperatures beyond this limit will require additional flowrate and/or may cause ITE to exceed design temperature.
  - **TCS Lower Bound**: this is the minimum TCS water supply temperature that may safely be provided to the ITE. This limit may be dynamic in nature and depend upon the dew point within the cooling space. The CDU is responsible for monitoring the ambient dew point and elevating the secondary water loop (TCS) supply temperature to at least 2°C above the room dew point to prevent condensation, this provides a buffer and accounts for some sensor uncertainty.

CDU Water Quality and Filtration

- CDU must be designed to operate harmoniously with both FWS on the "primary side" and TCS on the "secondary side" of the internal heat exchanger.
- Multi-rack external CDU's present risk of TCS contamination if deployed in phases
  - Stagnant branches pre-plumbed to future rack locations
- Multi-rack external CDU's require established ownership of TCS maintenance
  - Facility team, IT vendor, liquid cooling vendor(s) etc.
- End point filtration is recommended at the CDU supply in accordance with the White Paper filter guidance (2-10x smaller than most constrictive flow path)
  - Typical flat plate heat exchanger is ~2-8mm plate spacing

Non-CDU Implementations

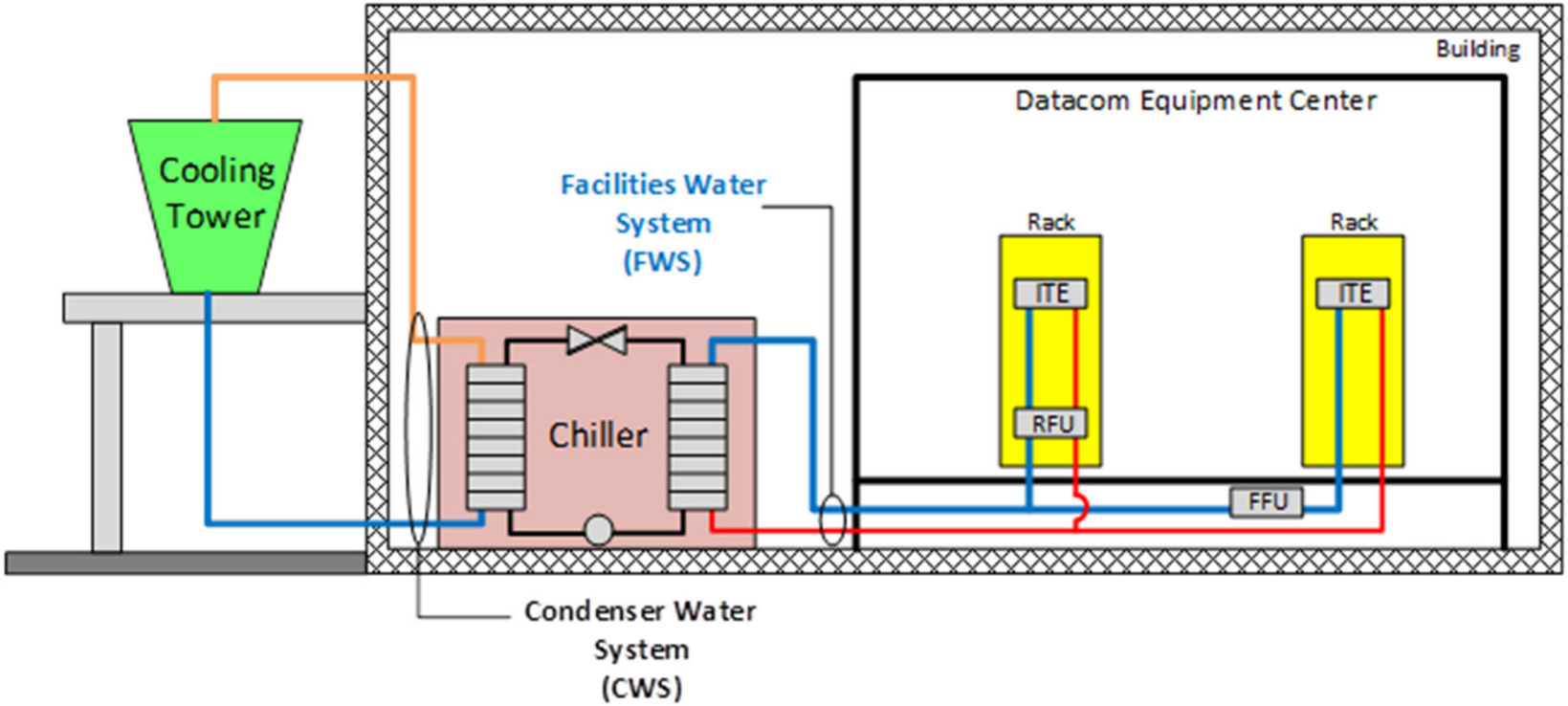

Benefits and Risks to Non-CDU Cooling

Benefits

- Reduced data center floor or IT rack space consumption
- Closer coupling of ITE heat sources with final heat dissipation medium
- Shared pumping redundancy
- Improved liquid cooling efficiency

Risks

- FWS Water Quality
- FWS Pressure fluctuations and leak potential
- Condensation

Non-CDU Filtration Discussion

Striking a balance between diminished thermal performance of larger fin spacing and the level of filtration that is economically suitable for most data centers, nominal fin spacing for a cold plate intended to be utilized in a non-CDU implementation is suggested to be between 0.7 and 1.0 mm. In line with this recommendation and the filtration sizing guidance from Section 5.2, it is suggested that RFU or FFU filtration be sized at 100 microns or smaller in order to prevent solid particulate from building up within the cold plate structure and impeding the flow of vital cooling fluid.

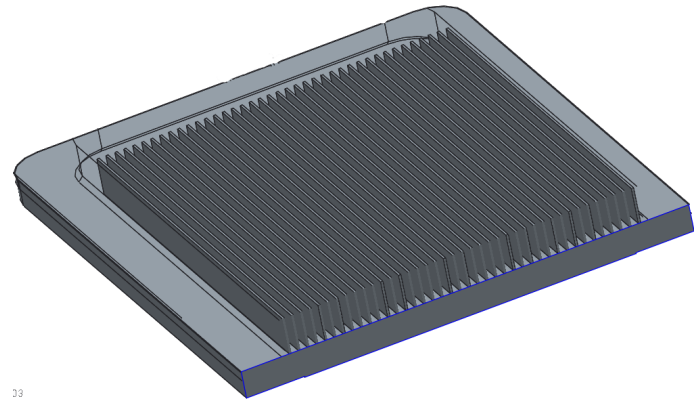

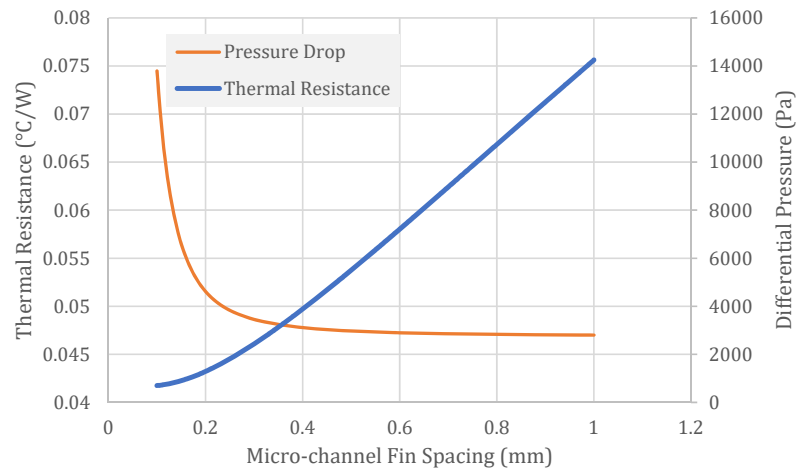

Wetted Materials

a Though normally avoided in liquid cooling loops due to its potential as a galvanic corrosion catalyst of other metals, Aluminum has been effectively used in FWS and TCS cooling loops provided there is proper surface treatment of the metal (via coatings or other proprietary methods) such that the aluminum is not directly exposed to the same liquid as other metals in the cooling system. Aluminum may also be considered in a TCS environment that leverages a non-conductive (dielectric) liquid.

b For use with CDU implementations only. From the Liquid Cooling book and regarding the FWS side, carbon steels may be used, provided that steel-specific corrosion inhibitor(s) are added to the system and proper inhibitor concentration is maintained.

c In reference to the Liquid Cooling Guideline book - copper is only listed in the TCS wetted material list. There are several versions of copper alloys listed in FWS section.

d Metal Passivation refers to the process of either creating new or restoring previously lost corrosion resistance properties at the surface of various metals. Many metals or alloys that exhibit strong corrosion resistance properties can lose those features at the surface of the metal during heat working. An example of this would be 300 series stainless steels which derive their strong corrosion resistance from chromium oxide formation across its surface formed when constituent element chromium is exposed to atmospheric air containing oxygen. During weldment, the extreme localized temperatures cause the chromium to be liberated from the surface exposing iron to the atmospheric air which then leads to iron oxide corrosion formation which may propagate throughout the metal structure. Various solution treatment options (such as nitric acid) can quickly restore the chromium concentration in the surface of the metal by dissolving unbound iron. With this in mind, some metals on this list are good choices for use in FWS and TCS but need passivation consideration if high temperature work is completed upon the stock.

e Both liquid thread sealant and tape have been effectively used within TCS and FWS environments. It is important, however, to follow best practices under the consultation and/or supervision of certified professionals with both sealing methods such that robust seals free of loop contamination are maintained.

Material	FWS	TCS
Acrylonitrile Butadiene Rubber (NBR)	X	
Aluminum & Alloys	X [a]	X [a]
Brass; with < 15% Zinc	X	X
Brass; Chrome Plated	X	X
Brass; Nickel Plated	X	X
Carbon Steels [b]	X	
Copper [c]	X	X
Copper Alloys: < 15% Zinc and Lead Free [c]	X	X
Polyoxymethyylene (POM)	X	
Ethylene propylene diene monomer (EPDM)	X	X
Fluoroelastomer (FKM)	X	
Fluorinated Ethylene Polypropylene (FEP)		X
Polyamide (PA)	X	
Polychloroprene (CR)	X	
Polyethylene		X
Polyoxymethylene (POM)	X	
Polyphenylene Sulfide (PPS)		X
Polytetrafluoroethylene (PTFE)	X	
Polypropylene (PP)	X	
Polysulfone or Polyphenylsulfone (PSU,PPSU)	X	X
Silicone	X	
Stainless Steel; Solution Treated and Passivated [d]	X	X
Thread Sealant [e]	X	X
Teflon Tape [e]	X	X

Materials in **bold** font were originally listed in the Liquid Cooling guideline book

Wetted Materials

- Updates to water quality parameters used in the Liquid Cooling Guideline book
- Collaboration from multiple OEMs, ITE manufacturers, and datacenter folks
- Most debated section of the white paper
- Additions from new connectors, flexible hoses, seals being utilized
- ASHRAE DOES NOT endorse or guarantee that this wetted material list prevents issues
- MUST be a collaboration between ITE manufacturers, suppliers, and even customer sites
- "***It is important to note that this is not an endorsement of such materials but, merely the latest in a growing list of materials that are being used by ITE manufactures for the water loop***."

Material	FWS	TCS
Acrylonitrile Butadiene Rubber (NBR)	X	
Aluminum & Alloys	X [a]	X [a]
Brass; with < 15% Zinc	X	X
Brass; Chrome Plated	X	X
Brass; Nickel Plated	X	X
Carbon Steels [b]	X	
Copper [c]	X	X
Copper Alloys: < 15% Zinc and Lead Free [c]	X	X
Polyoxymethyylene (POM)	X	
Ethylene propylene diene monomer (EPDM)	X	X
Fluoroelastomer (FKM)	X	
Fluorinated Ethylene Polypropylene (FEP)		X
Polyamide (PA)	X	
Polychloroprene (CR)	X	
Polyethylene		X
Polyoxymethylene (POM)	X	
Polyphenylene Sulfide (PPS)		X
Polytetrafluoroethylene (PTFE)	X	
Polypropylene (PP)	X	
Polysulfone or Polyphenylsulfone (PSU,PPSU)	X	X
Silicone	X	
Stainless Steel; Solution Treated and Passivated [d]	X	X
Thread Sealant [e]	X	X
Teflon Tape [e]	X	X

Materials in **bold** font were originally listed in the Liquid Cooling guideline book

Filtration

- Discuss more than just absolute filter ratings
- Begin to understand the quality of the filtration
- Introduce concept of Beta Ratio and Filter Efficiency
- Discussion on past experiences
  - Recommendations between
  - Between 2X to 10X for most applications
  - Based upon ITE mfg risk level, pressure drop, flow rate, and available physical space

$$Beta(x) = \frac{QTY\ particles\ of\ size\ (x)\ upstream}{QTY\ of\ particles\ of\ size\ (x)\ downstream}$$

$$Filter\ Efficiency = \left(\frac{Beta - 1}{Beta}\right) \cdot 100$$

Particle Description	Approximate Minimum Particle Size (micron)	Approximate Maximum Particle Size (micron)
Sand	100	NA
Human Hair	40	300
Pollen	10	> 500
Mold	3	30
Bacteria	1	50
Atmospheric Dust	< 1	40
Metallic Particles	≤ 1	> 20

Particle Size	Particles IN	Particles OUT	Beta Ratio	Filter Efficiency
50 Micron	200	1	200	99.5 %
10 Micron	100	1	100	99.0 %
5 Micron	75	1	75	98.7 %

Pressure Testing Requirements for Water-Cooled Servers

- Another topic of large discussion
- The primary safety standards for IT equipment
  - IEC 62368-1, Audio/Video, Information and Communication Technology Equipment – Part 1: Safety Requirements
  - IEC 60950-1 Information Technology Equipment – Safety – Part 1: General Requirements
  - ASME B31.n series, B31.3 specifically for interconnecting piping
- IEC standard requires a leak test at 5X the normal design pressure, while the ASME standard requires a test at 1.5X the design pressure.
- ASHRAE TC 9.9 discussions with IEC TC 108 (committee responsible for IEC 62368-1)
  - the 5X value has been changed to 3X under normal operating conditions, and 2x under abnormal and single fault conditions in IEC 62368-1, 3rd Edition (published Oct 2018)
- TC 9.9 and the IEC safety committee have agreed to collaborate. TC9.9 recommends moving to a 1.5X for the draft coming in 2021.
- Next version of the liquid cooling book will include better descriptions of the nature of the tests and to what test

Pressure Testing Requirements for Water-Cooled Servers

- Pressure testing the IT equipment at the data center is not recommended; beyond checking for leaks when the final connection is made. The IT manufacturer is responsible for ensuring the equipment is sound when it is shipped. This equipment or assembly may be at the blade or server level up to the rack or rack/CDU combination. Shutting down or taking off-line operating IT equipment such that new assemblies could be pressure tested when added to a liquid loop in the field is exactly what should be avoided.
- The IT manufacturer is responsible for the pressure testing of the assembly they will ship. This is generally done to the IEC code.
- The end-user and/or their construction contractor is responsible for the pressure testing of the site designed and installed interconnect piping/hosing between the site-based systems and IT supplied hardware. This is generally done to the ASME B31.3 (or international equivalent) code. This is typically done prior to the installation of the IT kit.
- It is the responsibility of the end-user/owner to ensure that the IT equipment pressure rating exceeds that of the cooling loop that it will ultimately be attached to. Detailed discussions between the owner, IT supplier and CDU supplier (if different than the IT supplier) are strongly recommended.

Fluid Couplings Utilized in Water-Cooled Systems

- Discuss different types of connectors
  - Wet break vs Dry break
- Begin defining performance parameters
  - Flow Rate
  - Flow Coefficient
  - Operating Pressure
  - Burst Pressure
  - Spillage
- Many termination styles and methods
- Plan for more discussion in book update

Wet Break Connectors

Dry Break Connectors

Flexible Hose Utilized in Water-Cooled Systems
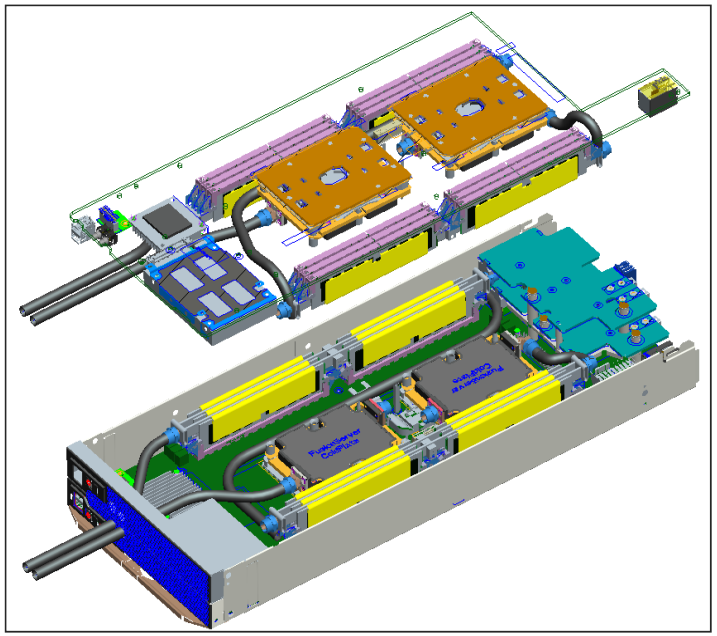
- Begin defining performance parameters
  - Maximum pressure ratings
  - Flammability requirements
  - Hose material
  - Hose reinforcement
  - Bend radius
  - Termination
  - Thermal expansion
  - Puncture protections
- Plan for more discussion in book update